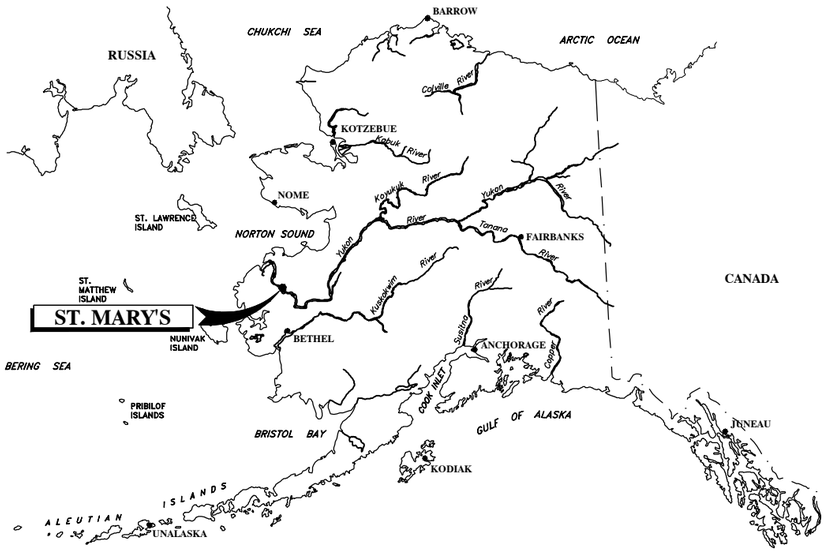

AVEC
ALASKA VILLAGE ELECTRIC COOPERATIVE
4831 Eagle Street Anchorage, Alaska 99503

SAINT MARY'S, ALASKA

WIND TURBINE PROJECT

65% DESIGN SUBMITTAL
OCTOBER 2011

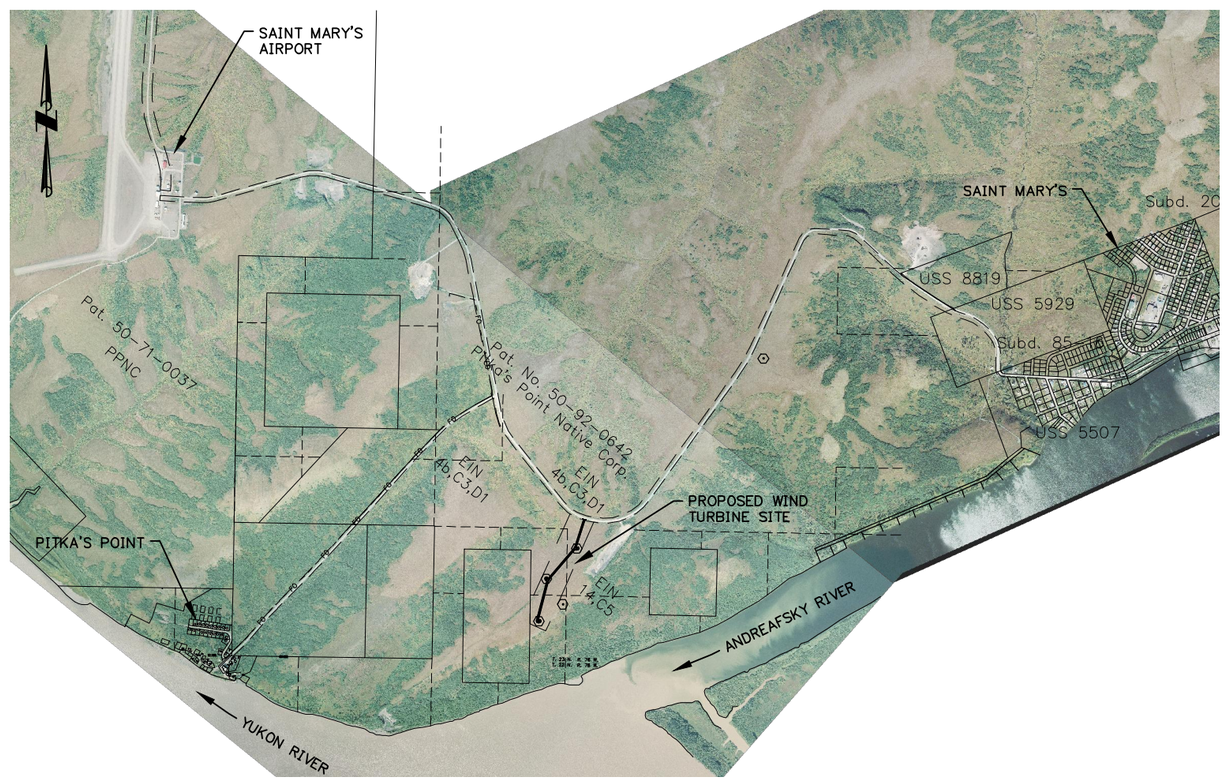

1 PROJECT AREA MAP
SCALE: GRAPHIC

1500 0 1500 3000
SCALE IN FEET

SHEET INDEX

SHEET#	SHEET TITLE
GENERAL	
G0	COVER
G1	NOTES, LEGEND, & ABBREVIATIONS
G2	PROJECT SPECIFICATIONS
CIVIL	
C1	VICINITY MAP
C2	SITE PLAN
C3	ROAD & PAD SECTIONS
STRUCTURAL	
S1	DESIGN LOADS & GENERAL NOTES
S2	FOUNDATION PLAN
S3	FOUNDATION PLAN
S4	DETAILS
S5	EMBEDMENT DETAILS
S6	LAYOUT PLAN & SUPPORT DETAIL
S7	MAST DETAILS
ELECTRICAL	
E1	ELECTRICAL REFERENCE PLAN
E2	PARTIAL ELECTRICAL DISTRIBUTION PLAN
E3	PARTIAL ELECTRICAL DISTRIBUTION PLAN
E4	PARTIAL ELECTRICAL DISTRIBUTION PLAN
E5	PARTIAL ELECTRICAL DISTRIBUTION PLAN
E6	PARTIAL ELECTRICAL DISTRIBUTION PLAN
E7	WIND TURBINE DISTRIBUTION PLAN
E8	DETAILS
E9	DETAILS
E10	DETAILS
E11	DETAILS

Project Number (Consultant) 30704.02 (AVEC) 9722631
AVEC Project Manager MATT METCALF, P.E.
Construction Manager
Final Design (Date)
Fire Marshal Approval (Date)
Construction Period (From) (To)
As-Builts (Date)

CRW ENGINEERING GROUP, LLC
3940 ARCTIC BLVD. SUITE 300
ANCHORAGE, ALASKA 99503
PHONE: (907) 562-3252
FAX: (907) 561-2273

FILE: J:\Jobsdata\30704.02 AVEC - St. Mary's Wind Project\00 CADD\01 Working Set\30704_02 Base.dwg

PROJECT SCOPE

THIS PROJECT PROVIDES FOR THE CONSTRUCTION OF A WIND FARM AND SUPPORTING INFRASTRUCTURE IN SAINT MARY'S, ALASKA. SPECIFIC ACTIVITIES WILL INCLUDE THE CONSTRICTION OF:

- INSTALLATION OF 3 NORTHWIND 100 WIND TURBINES WITH CONCRETE FOUNDATIONS.
- CONSTRUCTION OF A GRAVEL ACCESS ROAD AND 3 WIND TURBINE PADS.
- UPGRADING 14,000 FT OF TWO PHASE OVERHEAD POWER TO THREE PHASE.
- INSTALL 3,500 FT OF NEW THREE PHASE OVERHEAD POWER AND THE ASSOCIATED TRANSFORMER BANKS TO CONNECT THE 3 WIND TURBINES.

GENERAL NOTES

1. THE CONTRACTOR SHALL PROTECT ALL ITEMS NOT SCHEDULED FOR DEMOLITION DURING CONSTRUCTION. DISTURBED AREAS SHALL BE RESTORED TO PRE-CONSTRUCTION CONDITION.

2. ALL EXISTING UTILITIES MAY NOT BE SHOWN ON THESE PLANS. THE CONTRACTOR SHALL CONSULT WITH THE APPROPRIATE UTILITY ORGANIZATIONS TO VERIFY AND LOCATE UTILITIES PRIOR TO CONSTRUCTION. SEE UTILITY CONTACT INFORMATION ON THIS SHEET.

3. IT IS THE RESPONSIBILITY OF THE CONTRACTOR TO DETERMINE APPROPRIATE TEMPORARY CUT SLOPES OR SHORING FOR ALL EXCAVATIONS, INCLUDING MATERIAL EXTRACTION ACTIVITIES AT THE LOCAL PIT. THE CONTRACTOR MUST COMPLY WITH APPLICABLE FEDERAL AND STATE OSHA REGULATIONS. THE CONTRACTOR SHALL MAINTAIN ALL SIGNS, BARRICADES, WARNING LIGHTS AND OTHER PROTECTIVE DEVICES NECESSARY FOR SAFETY AND TRAFFIC CONTROL.

4. THE CONTRACTOR SHALL IMPLEMENT BEST MANAGEMENT PRACTICES TO PREVENT EROSION OR SEDIMENT TRANSPORT DUE TO STORMWATER RUNOFF FROM THE SITE DURING CONSTRUCTION.

5. THE CONTRACTOR SHALL BE RESPONSIBLE FOR COORDINATING HIS WORK WITH EXISTING FACILITY OPERATORS, OTHER CONTRACTORS, SUBCONTRACTORS, THE CORPORATION, AND STATE AND FEDERAL AUTHORITIES.

6. THE DRAWINGS ARE DIAGRAMMATIC AND DO NOT NECESSARILY SHOW ALL FEATURES OF THE REQUIRED WORK. PROVIDE ALL LABOR, EQUIPMENT AND MATERIALS REQUIRED FOR A COMPLETE, AND CODE COMPLIANT SYSTEM. VERIFY EXISTING FIELD CONDITIONS PRIOR TO STARTING CONSTRUCTION. IMMEDIATELY CONTACT THE ENGINEER FOR CLARIFICATION OF QUESTIONABLE ITEMS OR APPARENT CONFLICTS.

7. ALL ITEMS TO BE INSTALLED ARE NEW UNLESS SPECIFICALLY INDICATED AS EXISTING. INSTALL ALL MATERIALS AND EQUIPMENT IAW MANUFACTURERS RECOMMENDATIONS, INSTRUCTIONS, AND INSTALLATION DRAWINGS, UNLESS OTHERWISE INDICATED ON THE DRAWINGS.

8. THE SPECIFICATION OF A NAME BRAND PRODUCT FOLLOWED BY THE "OR EQUAL" PHRASE IS DONE MERELY TO ESTABLISH THE MINIMUM LEVEL OF QUALITY OF MATERIALS AND EQUIPMENT REQUIRED AND IS NOT A PRODUCT ENDORSEMENT. SUBMIT SUBSTITUTIONS FOR REVIEW AND APPROVAL, UNLESS "NO SUBSTITUTIONS" IS SPECIFIED. PRIOR TO PROCUREMENT, SUBMIT VENDORS LIST WITH A LIST OF EQUIPMENT TO BE PROVIDED BY EACH VENDOR.

9. PERFORM WORK WITH SKILLED CRAFTSMEN SPECIALIZED IN SAID WORK. INSTALL ALL MATERIALS IN A NEAT, ORDERLY, AND SECURE FASHION, AS REQUIRED BY THE DRAWINGS AND SPECIFICATIONS AND COMMONLY RECOGNIZED STANDARDS OF GOOD WORKMANSHIP.

10. MARK UP DESIGN DRAWINGS TO REFLECT FIELD CHANGES THROUGHOUT CONSTRUCTION. TURN OVER "RED LINE" CONSTRUCTION DRAWINGS TO ENGINEER AT COMPLETION OF THE PROJECT.

11. ALL WORK SHALL BE PERFORMED IN ACCORDANCE WITH U.S. ENVIRONMENTAL PROTECTION AGENCY, ALASKA DEPARTMENT OF ENVIRONMENTAL CONSERVATION, AND STATE AND FEDERAL OCCUPATIONAL HEALTH AND SAFETY REGULATIONS.

ABBREVIATIONS

ADEC	ALASKA DEPARTMENT OF ENVIRONMENTAL CONSERVATION
ADOT	ALASKA DEPARTMENT OF TRANSPORTATION
ALCAP	ALUMINUM SURVEY CAP
ANSI	AMERICAN NATIONAL STANDARDS INSTITUTE
API	AMERICAN PETROLEUM INSTITUTE
APPROX	APPROXIMATE
ASTM	AMERICAN SOCIETY FOR TESTING OF MATERIALS
AST	ABOVEGROUND STORAGE TANK
AWS	AMERICAN WELDING SOCIETY
BLDG	BUILDING
CMP	CORRUGATED METAL PIPE
CORPORATION	NAPAKIAK CORP.
DEMO	DEMOLISH
DFT	DRY FILM THICKNESS
DIA	DIAMETER
DWG	DRAWING
E	EAST
EA	EACH
EL	ELEVATION
ELEC	ELECTRIC
EPA	U.S. ENVIRONMENTAL PROTECTION AGENCY
ENGINEER	CRW ENGINEERING GROUP, LLC
E-VENT	EMERGENCY VENT
°F	FAHRENHEIT
FF	FINISH FLOOR ELEV.
FG	FINISH GRADE
FOR	FUEL OIL RETURN
FOS	FUEL OIL SUPPLY
FPT	FEMALE NATIONAL PIPE TAPERED THREAD
FT	FOOT OR FEET
GA	GAUGE
GAL	GALLON
GALV	GALVANIZED
GPM	GALLONS PER MINUTE
HDPE	HIGH DENSITY POLYETHYLENE
HP	HORSE POWER
HR	HOUR
IAW	IN ACCORDANCE WITH
IBC	INTERNATIONAL BUILDING CODE
ID	INSIDE DIAMETER
IFC	INTERNATIONAL FIRE CODE
IPC	INTERNATIONAL PLUMBING CODE
LF	LINEAR FEET
LB	POUND
M	METERS
MAX	MAXIMUM
MIL	0.001 INCH
MIN	MINIMUM
MPT	MALE NATIONAL PIPE TAPERED THREAD
N	NORTH
NC	NORMALLY CLOSED
NFS	NON FROST SUSCEPTIBLE (SOIL)
NO	NORMALLY OPEN
NPT	NATIONAL PIPE TAPERED THREAD
NTS	NOT TO SCALE
OAE	OR APPROVED EQUAL
OD	OUTSIDE DIAMETER
OSHA	OCCUPATIONAL SAFETY AND HEALTH ADMINISTRATION
OZ	OUNCE
PCC	PORTLAND CEMENT CONCRETE
PL	PLATE
PRV	PRESSURE RELIEF VALVE
PSF	POUNDS PER SQUARE FOOT
PSI	POUNDS PER SQUARE INCH
R	RADIUS
RF	RAISED FACE
S	SEWER
SCH	SCHEDULE
SHPO	STATE HISTORIC PRESERVATION OFFICER
SIM	SIMILAR
SPEC	SPECIFICATION
SQ	SQUARE
SS	STAINLESS STEEL
SSPC	STEEL STRUCTURES PAINTING COUNCIL
STA	STATION
SY	SQUARE YARD
TBM	TEMPORARY BENCH MARK
TS	TUBE STEEL
TYP	TYPICAL
UG	UNDER GROUND
UL	UNDERWRITERS LABORATORY
UPC	UNIFORM PLUMBING CODE
	UNDERGROUND STORAGE TANK
	WITH
	WATER

CIVIL LEGEND (GENERAL)

NOTE: SOME DETAILS UTILIZE SYMBOLS NOT IN THIS GENERAL LEGEND. WHERE THIS OCCURS, SYMBOLS ARE DEFINED ON THE SHEET IN WHICH THEY ARE USED.

- PROPERTY BOUNDARY
- CENTERLINE
- CULVERT
- EDGE OF WATER
- DITCH LINE/DRAINAGE SWALE
- 2% — DRAINAGE DIRECTION & SLOPE
- TRAVELED WAY
- FILL SLOPE
- CUT SLOPE
- FENCE LINE
- 20 — GROUND ELEVATION CONTOURS
- BOLLARD
- PP — POWER POLE
- SURVEY MONUMENT
- ø — DIAMETER

UTILITY LINE/PIPELINE DESIGNATIONS

E	ELECTRIC
D	DIESEL FUEL
G	GASOLINE
S	SANITARY SEWER
T	TELEPHONE
W	WATER

- # — UNDERGROUND UTILITY LINE/PIPELINE: EXISTING
- # — UNDERGROUND UTILITY LINE/PIPELINE: PROPOSED
- # — ABOVEGROUND UTILITY LINE/PIPELINE: EXISTING
- # — ABOVEGROUND UTILITY LINE/PIPELINE: PROPOSED
- EXISTING FUEL LINE TO BE DECOMMISSIONED

DETAIL/SECTION REFERENCES

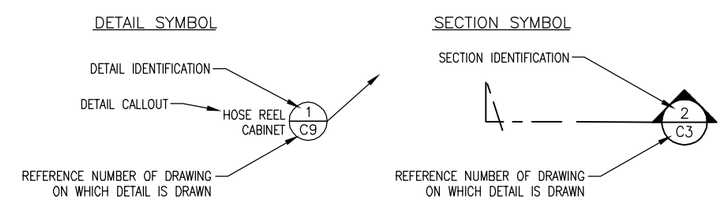

CALL BEFORE YOU DIG

ELECTRIC – ALASKA VILLAGE ELECTRIC COOPERATIVE (907-561-1818)
TELEPHONE – UNITED UTILITIES (907-273-5265)
WATER/SEWER – CITY OF ST. MARY'S (907-438-2515)

AVEC ALASKA VILLAGE ELECTRIC COOPERATIVE
4831 Eagle Street
Anchorage, Alaska 99503

STATE OF ALASKA 49TH JEFFREY V. STANLEY CE 8878 REGISTERED PROFESSIONAL ENGINEER

CRW ENGINEERING GROUP LLC
3940 ARCTIC BLVD. SUITE 300
ANCHORAGE, ALASKA 99503
PHONE: (907) 562-3252
FAX: (907) 561-2273

ST. MARYS, ALASKA
WIND TURBINE PROJECT

NOTES, LEGEND, & ABBREVIATIONS

NO.	REVISION	BY	DATE
A	35% DESIGN SUBMITTAL	JHR	8/2011
B	65% DESIGN SUBMITTAL	CMK	10/2011

Plot Date 10/21/11
Designed AMH
Drawn AMH
Approved JVS

Sheet No. G1

File: J:\Jobsdata\30704.02 AVEC - St. Mary's Wind Project\00 CADD\01 Working Set\30704_02 G SHEETS.dwg

EARTHWORK

GENERAL

A. NOTIFY ENGINEER OF ANY DISCREPANCIES BETWEEN CONTRACTUAL REQUIREMENTS AND SITE CONDITIONS PRIOR TO START OF WORK.

B. MAINTAIN SUBGRADE, BACKFILL AND EMBANKMENT AREAS OR LIFTS OPEN UNTIL TESTING IS COMPLETE AND TESTING REQUIREMENTS ARE MET, OR APPROVAL OF TESTING IS SECURED FROM THE ENGINEER.

C. ANY WORK COVERED UP PRIOR TO TEST COMPLETION AND ACHIEVING TESTING REQUIREMENTS OR ENGINEER'S APPROVAL SHALL BE EXCAVATED AND RECONSTRUCTED AT CONTRACTOR'S EXPENSE.

D. WORK IN INCLEMENT WEATHER AT CONTRACTOR'S RISK.

E. ANY MATERIALS WHICH BECOME UNSTABLE AS THE RESULT OF IMPROPER SELECTION OF TECHNIQUES, EQUIPMENT, OR OPERATIONS DURING INCLEMENT WET WEATHER SHALL BE REPLACED AT CONTRACTOR'S EXPENSE.

F. EXCAVATIONS AND EMBANKMENT SHALL BE ACCOMPLISHED IN SUCH A MANNER THAT DRAINAGE IS MAINTAINED AT ALL TIMES; ANY AREAS NOT SO DRAINED SHALL BE KEPT FREE OF STANDING WATER BY PUMPING IF NECESSARY.

G. THE CONTRACTOR SHALL PROVIDE FOR THE PROPER MAINTENANCE OF TRAFFIC FLOW AND ACCESSIBILITY AS MAY BE NECESSARY, AND SHALL ALSO MAKE ADEQUATE PROVISIONS FOR THE SAFETY OF PROPERTY AND PERSONS.

SUBMITTALS

CONTRACTOR SHALL MAKE THE FOLLOWING EARTHWORK RELATED SUBMITTALS:

A. SUBMIT ONE GRADATION ANALYSIS AND MOISTURE–DENSITY (COMPACTION CURVE) TEST REPORT FOR EACH MATERIAL SOURCE UTILIZED. ALL TEST REPORTS SHALL BE FROM A CERTIFIED SOILS TESTING LABORATORY.

B. SUBMIT IN–PLACE DENSITY TEST RESULTS IN APPROVED FORMAT. PROVIDE 1 TEST PER 100 CY OF PLACED MATERIAL AND 1 TEST PER LIFT.

EMBANKMENT FILL

A. EMBANKMENT FILL SHALL BE LOCALLY AVAILABLE, 3–INCH MINUS, GRANULAR COMPACTABLE MATERIAL. THE MATERIAL SHALL BE PLACED IN AN UNFROZEN CONDITION AND SHALL BE FREE OF CLAY BALLS, VEGETATIVE MATTER, OR OTHER DELETERIOUS MATTERS. EMBANKMENT MATERIAL SHALL CONTAIN NO MORE THAN 15% BY WEIGHT PASSING THE NO. 200 SIEVE.

EMBANKMENT CONSTRUCTION

A. GROUND SURFACE PREPARATION

1. EXISTING TUNDRA MAT WITHIN EMBANKMENT FOOTPRINT TO REMAIN UNDISTURBED.
2. PLACE WOVEN GEOTEXTILE FABRIC (AMOCO 2016 OR EQUAL) DIRECTLY OVER EXISTING GROUND SURFACE. EXTEND GEOTEXTILE A MINIMUM OF 2–FEET BEYOND TOE OF EMBANKMENT FOOTPRINT. GEOTEXTILE FABRIC JOINTS SHALL BE SEWN IN ACCORDANCE WITH THE MANUFACTURERS RECOMMENDATIONS. LAPPED GEOTEXTILE JOINTS SHALL NOT BE ALLOWED.

B. EMBANKMENT PLACEMENT:

1. THE SPECIFIED MATERIAL SHALL BE PLACED AT THE LOCATIONS AND TO THE LINES AND GRADES INDICATED ON THE CONTRACT DRAWINGS. THE MATERIAL SHALL BE PLACED AND SPREAD UNIFORMLY IN SUCCESSIVE LAYERS NOT EXCEEDING TWELVE (12) INCHES IN LOOSE THICKNESS WITH THE EXCEPTION OF THE INITIAL LIFT WHICH MAY BE UP TO EIGHTEEN (18) INCHES. THE LAYERS SHALL BE CARRIED UP FULL WIDTH FROM THE BOTTOM OF THE FILL. EACH LAYER SHALL BE COMPACTED IN ACCORDANCE WITH THE SPECIFICATIONS.
2. BLADING, ROLLING, AND TAMPING SHALL CONTINUE UNTIL THE SURFACE IS SMOOTH, FREE FROM WAVES AND IRREGULARITIES, AND CONFORMS TO ELEVATIONS SHOWN ON THE CONTRACT DRAWINGS. IF AT ANY TIME THE MATERIAL IS EXCESSIVELY WET, IT SHALL BE AERATED BY MEANS OF BLADE GRADERS, HARROWS, OR OTHER SUITABLE EQUIPMENT UNTIL THE MOISTURE CONTENT IS SATISFACTORY. THE SURFACE SHALL THEN BE COMPACTED AND FINISHED AS SPECIFIED ABOVE.
3. OVERSIZED MATERIAL SHALL BE REMOVED. PORTIONS OF ANY LAYER IN WHICH THE EMBANKMENT MATERIAL BECOMES SEGREGATED SHALL BE REMOVED AND REPLACED WITH SATISFACTORY MATERIAL.

B. COMPACTION

1. COMPACT EACH EMBANKMENT LIFT TO 95% OF MAXIMUM DENSITY AT OPTIMUM MOISTURE CONTENT AS DETERMINED BY ASTM D1557 OR AASHTO T–180, METHOD D .
2. CORRECT IMPROPERLY COMPACTED AREAS OR LIFTS AS DIRECTED BY THE ENGINEER IF SOIL DENSITY TESTS INDICATE INADEQUATE COMPACTION.
3. THE CONTRACTOR SHALL BE RESPONSIBLE FOR PROVIDING THE PROPER SIZE AND TYPE OF COMPACTION EQUIPMENT AND FOR SELECTING THE PROPER METHOD OF OPERATING SAID EQUIPMENT TO ATTAIN THE REQUIRED COMPACTION DENSITY.

C. CONTRACTOR PROVIDED TESTING

THE CONTRACTOR SHALL PROVIDE LABORATORY TESTING AND ON–SITE COMPACTION DENSITY TESTING SERVICES AS SPECIFIED. THE RESULTS OF EACH DENSITY TEST SHALL BE RECORDED ON A TEST SHEET. THE FOLLOWING INFORMATION SHALL BE RECORDED.

1. SITE PLAN SHOWING HORIZONTAL AND VERTICAL LOCATION OF THE TEST.
2. DENSITY MEASUREMENT AND PERCENT OF REFERENCED STANDARD COMPACTION.
3. COPY OF COMPACTION CURVE SHOWING MAXIMUM DENSITY.
4. MATERIAL DESCRIPTION AND APPROPRIATE COMPACTION CONTROL STANDARD.

D. MAINTENANCE

1. AS NECESSARY, CONTRACTOR SHALL WATER THE SITE WHILE GRADING IS IN PROGRESS TO CONTROL DUST.
2. CONTRACTOR SHALL PROTECT NEWLY GRADED AREAS FROM TRAFFIC AND EROSION AND KEEP FREE OF TRASH AND DEBRIS.
3. CONTRACTOR SHALL REPAIR AND RE–ESTABLISH GRADES IN SETTLED, ERODED AND RUTTED AREAS AS DIRECTED BY THE ENGINEER.
4. WHERE COMPLETED COMPACTED AREAS ARE DISTURBED BY SUBSEQUENT CONSTRUCTION OPERATIONS OR ADVERSE WEATHER, SCARIFY SURFACE, RESHAPE, AND COMPACT TO REQUIRED DENSITY PRIOR TO FURTHER CONSTRUCTION.
5. ALL OPEN EXCAVATIONS SHALL BE ADEQUATELY SIGNED AND BARRICADED TO PROTECT THE PUBLIC.

AVEC
ALASKA VILLAGE ELECTRIC COOPERATIVE
4831 Eagle Street
Anchorage, Alaska 99503

STATE OF ALASKA
JEFFREY V. STANLEY
CE 8878
REGISTERED PROFESSIONAL ENGINEER

CRW ENGINEERING GROUP LLC
3940 ARCTIC BLVD. SUITE 300
ANCHORAGE, ALASKA 99503
PHONE: (907) 562–3252
FAX: (907) 561–2273

ST. MARYS, ALASKA
WIND TURBINE PROJECT

PROJECT SPECIFICATIONS

NO.	REVISION	BY	DATE
A	35% DESIGN SUBMITTAL	JHR	8/2011
B	65% DESIGN SUBMITTAL	CMK	10/2011

Plot Date 10/21/11
Designed AMH
Drawn AMH
Approved JVS

Sheet No. G2

File: J:\Jobsdata\30704.02 AVEC – St. Mary's Wind Project\00 CADD\01 Working Set\30704_02 G SHEETS.dwg

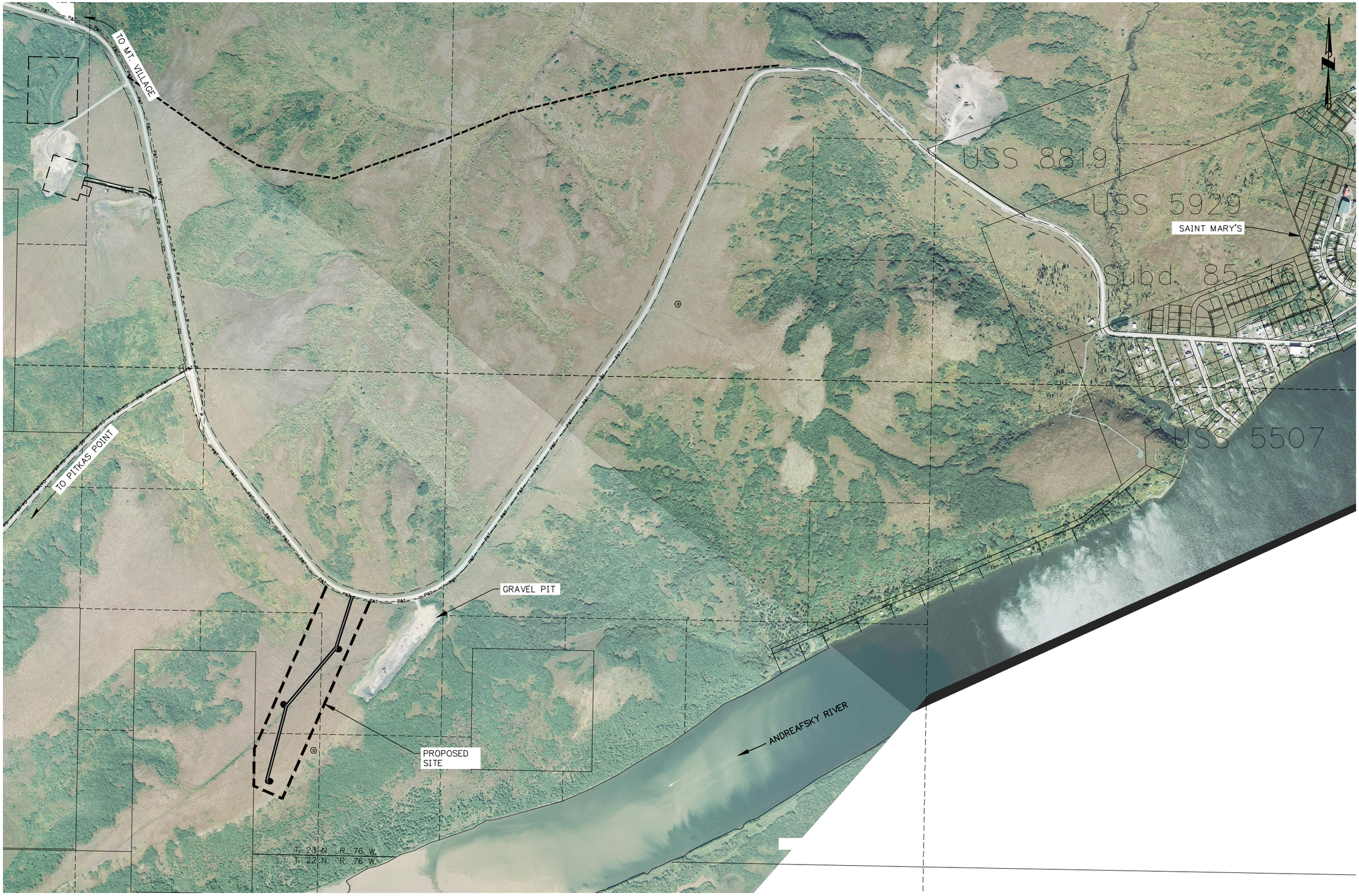

1 **VICINITY MAP**
SCALE: GRAPHIC

GRAPHIC SCALE
500 0 500 1000
SCALE IN FEET

AVEC
ALASKA VILLAGE ELECTRIC COOPERATIVE
4831 Eagle Street
Anchorage, Alaska 99503

STATE OF ALASKA
49TH
JEFFREY V. STANLEY
CE 8878
REGISTERED PROFESSIONAL ENGINEER

CRW ENGINEERING GROUP LLC
3940 ARCTIC BLVD. SUITE 300
ANCHORAGE, ALASKA 99503
PHONE: (907) 562-3252
FAX: (907) 561-2273

ST. MARYS, ALASKA
WIND TURBINE PROJECT

VICINITY MAP

NO.	REVISION	BY	DATE
A	35% DESIGN SUBMITTAL	JHR	8/2011
B	65% DESIGN SUBMITTAL	CMK	10/2011

Plot Date 10/21/11
Designed AMH
Drawn AMH
Approved JVS

Sheet No. C1

File: J:\Jobsdata\30704.02 AVEC - St. Mary's Wind Project\00 CADD\01 Working Set\30704_02 Base.dwg

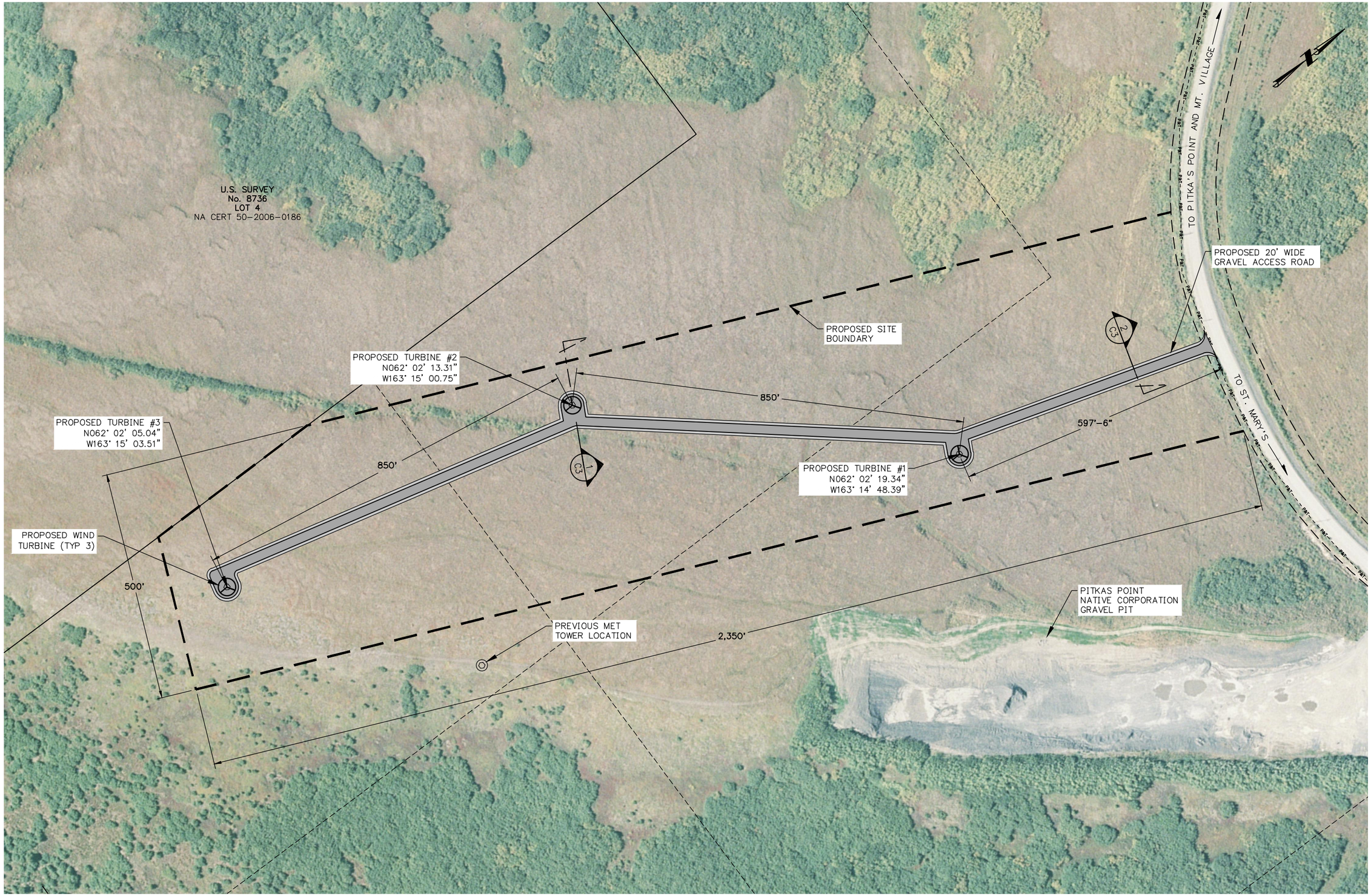

1 **SITE PLAN**
SCALE: GRAPHIC

GRAPHIC SCALE
100 0 100 200
SCALE IN FEET

AVEC
ALASKA VILLAGE ELECTRIC COOPERATIVE
4831 Eagle Street
Anchorage, Alaska 99503

STATE OF ALASKA
JEFFREY V. STANLEY
CE 8878
REGISTERED PROFESSIONAL ENGINEER

CRW ENGINEERING GROUP LLC
3940 ARCTIC BLVD. SUITE 300
ANCHORAGE, ALASKA 99503
PHONE: (907) 562-3252
FAX: (907) 561-2273

ST. MARYS, ALASKA
WIND TURBINE PROJECT

SITE PLAN

NO.	REVISION	BY	DATE
A	35% DESIGN SUBMITTAL	JHR	8/2011
B	65% DESIGN SUBMITTAL	CMK	10/2011

Plot Date 10/21/11
Designed AMH
Drawn AMH
Approved JVS

Sheet No. C2

File: J:\Jobsdata\30704.02 AVEC - St. Mary's Wind Project\00 CADD\01 Working Set\30704_02 Base.dwg

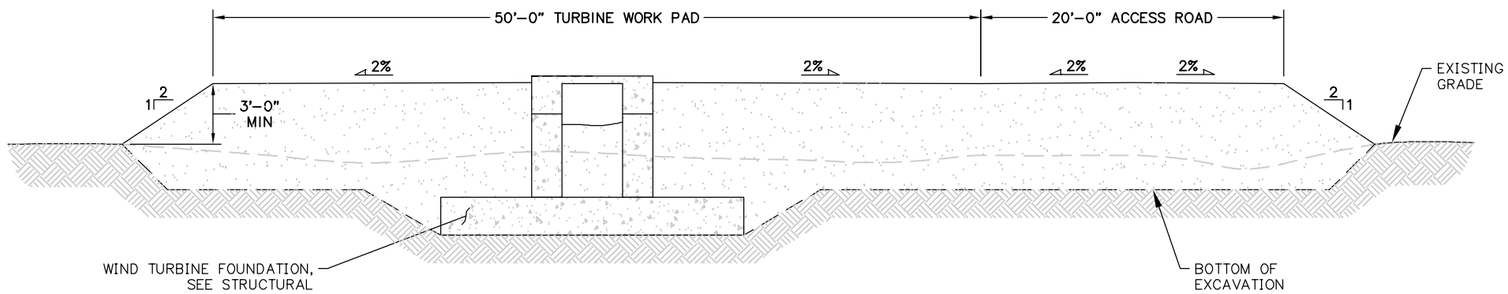

1 TURBINE PAD SECTION
SCALE: GRAPHIC

GRAPHIC SCALE
5 0 5 10
SCALE IN FEET

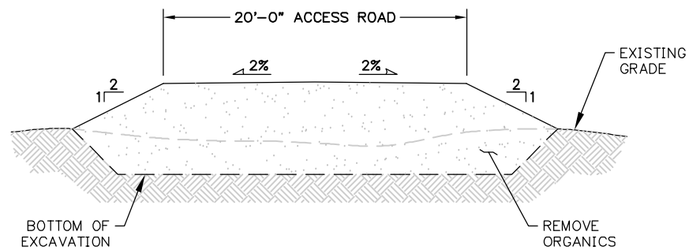

2 ACCESS ROAD SECTION
SCALE: GRAPHIC

GRAPHIC SCALE
5 0 5 10
SCALE IN FEET

AVEC
ALASKA VILLAGE ELECTRIC COOPERATIVE
4831 Eagle Street
Anchorage, Alaska 99503

STATE OF ALASKA
JEFFREY V. STANLEY
CE 8878
REGISTERED PROFESSIONAL ENGINEER

CRW ENGINEERING GROUP LLC
3940 ARCTIC BLVD. SUITE 300
ANCHORAGE, ALASKA 99503
PHONE: (907) 562-3252
FAX: (907) 561-2273

ST. MARYS, ALASKA
WIND TURBINE PROJECT

ROAD & PAD SECTIONS

NO.	REVISION	BY	DATE
A	35% DESIGN SUBMITTAL	JHR	8/2011
B	65% DESIGN SUBMITTAL	CMK	10/2011

Plot Date 10/21/11
Designed AMH
Drawn JHR
Approved JVS

Sheet No. C3

File: J:\Jobsdata\30704.02 AVEC - St. Mary's Wind Project\00 CADD\01 Working Set\30704_02 Base.dwg

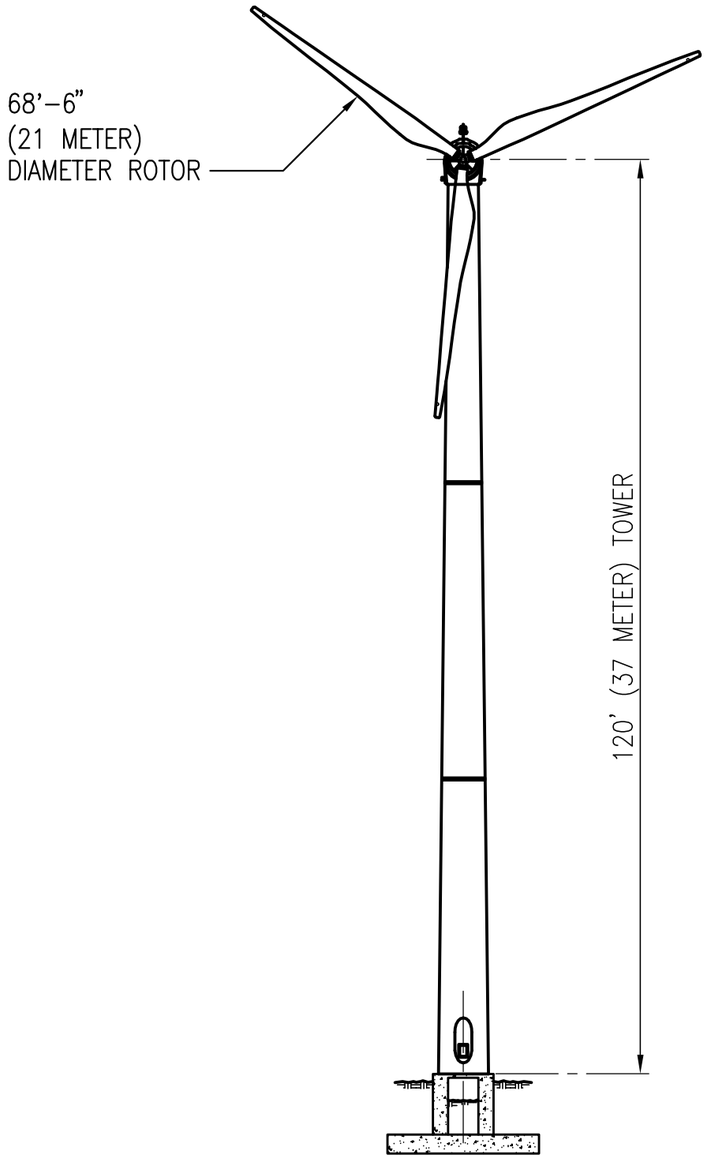

1 OVERALL ELEVATION
SCALE: 1" = 20'-0"

GENERAL STRUCTURAL NOTES

THE FOLLOWING NOTES APPLY UNLESS INDICATED OTHERWISE:

GENERAL:

TOWER DESIGN AND REACTIONS BY NORTHERN POWER. SEE NORTHERN POWER DRAWINGS AND INSTALLATION INSTRUCTIONS FOR ADDITIONAL INFORMATION AND INSTALLATION REQUIREMENTS.

DESIGN SOIL PRESSURE:

SUSTAINED LOADS – 3500 PSF MAX DEAD + LIVE LOAD
SHORT TERM LOADS – 4500 PSF MAX DEAD + LIVE LOAD

CAST FOOTINGS ON COMPACTED GRANULAR FILL OVER COMPACTED SUBGRADE. CONSULT SOILS REPORT BY GOLDER ASSOCIATES, DATED AUGUST 16, 2010, AND MODIFYING TECHNICAL MEMO DATED MARCH 3, 2011, FOR FOUNDATION AND EXCAVATION INFORMATION.

DESIGN LIVE LOADS:

WIND = 133 MPH 3-SECOND GUST

PRECAST CONCRETE:

f'c = 5000 PSI, MAXIMUM W/C = 0.45, MINIMUM 6 SACKS OF CEMENT PER CUBIC YARD. ENTRAINED AIR 5% PLUS OR MINUS 1%. SUBMIT MIX DESIGN. SPECIAL INSPECTION REQUIRED. ALL COMPONENTS SHALL BE MATCH CAST.

UNLESS OTHERWISE NOTED, REINFORCING STEEL SHALL CONFORM TO ASTM A615, GRADE 60. PROVIDE CLASS B SPLICE. SUBMIT REINFORCING STEEL SHOP DRAWINGS WITH DETAILS PER ACI 315 MANUAL OF STANDARD PRACTICE.

CONCRETE COVER 1 1/2".

LIFTING INSERTS TO BE DESIGNED BY PRECAST SUPPLIER. SUBMIT SHOP DRAWINGS SHOWING EMBEDDED ITEMS, BLOCKOUTS, ADDED REINFORCING REQUIRED FOR LIFTING, AND TYPE AND LOCATION OF ALL LIFTING DEVICES. FABRICATION, TRANSPORTATION, AND ERECTION PER PCI STANDARDS.

GROUT:

GROUT – 10,000 PSI MINIMUM 7-DAY CUBE STRENGTH PER ASTM C1107. GROUT TO BE PREMIXED, NONMETALLIC, SHRINKAGE-RESTISTANT GROUT PER ASTM C1107. USE SPECIFIC GROUT MIX RECOMMENDED BY MANUFACTURER FOR EACH GROUT APPLICATION AND FOLLOW MANUFACTURER'S INSTRUCTIONS.

POST-TENSIONED RODS (P/T ROD):

WILLIAMS FORM ENGINEERING 150KSI 1¼" DIAMETER ALL-THREAD BAR, HOT DIP GALVANIZED. PRE-STRESS ALL BARS TO 110 KIPS LOCK OFF LOAD. GROUT ANNULAR SPACE AFTER BAR IS STRESSED. USE NON-SHRINK GROUT WITH A MINIMUM 28 DAY COMPRESSIVE STRENGTH OF 3000 PSI.

ANCHOR RODS:

ANCHOR RODS, ASTM A320 L7, 105 KSI MIN YIELD STRENGTH, 125 KSI MIN TENSILE STRENGTH.

STRUCTURAL STEEL:

ALL STEEL ASTM A572, 50 KSI MINIMUM YIELD STRENGTH. BEARING PLATES TO BE HOT DIP GALVANIZED. FABRICATION PER AISC SPECIFICATIONS. SUBMIT SHOP DRAWINGS.

WELDING PER AWS D1.1. WELDERS CERTIFIED PER AMERICAN WELDING SOCIETY FOR ROD AND POSITION. ELECTRODES SHALL BE E70XX MINIMUM, WITH MINIMUM CHARPY V-NOTCH TOUGHNESS OF 20 FT-LB AT -20 DEG F.

MISCELLANEOUS:

DRAWINGS INDICATE GENERAL AND TYPICAL DETAILS OF CONSTRUCTION. WHERE CONDITIONS ARE NOT SPECIFICALLY INDICATED BUT ARE OF SIMILAR CHARACTER TO DETAILS SHOWN, SIMILAR DETAILS OF CONSTRUCTION SHALL BE USED SUBJECT TO REVIEW AND APPROVAL BY THE ARCHITECT AND STRUCTURAL ENGINEER,

REFER TO ELECTRICAL DRAWINGS FOR SIZE AND LOCATION OF CONDUITS, ETC, NOT SHOWN.

SHOP DRAWINGS SHALL BE SUBMITTED AND REVIEWED PRIOR TO FABRICATION.

DESIGN LOADS	
HORIZONTAL AT TOWER BASE	28.0 KIPS
VERTICAL AT TOWER BASE	43.6 KIPS
OVERTURNING AT TOWER BASE	2471 KIP*FT
TORSION AT TOWER BASE	23.2 KIP*FT

UNFACTORED DESIGN LOADS SUPPLIED BY NORTHERN POWER FOR NW100 TURBINE. 120' (37 METER) TOWER. 68'-6" (21 METER) ROTOR. DESIGN WIND SPEED 133 MPH, 3 SECOND GUST, 50 YEAR RETURN PERIOD.

AVEC
ALASKA VILLAGE ELECTRIC COOPERATIVE
Anchorage, Alaska 99503
4831 Eagle Street

STATE OF ALASKA 49TH
TROY J. FELLER
Aug 24, 2011
CE 8381
REGISTERED PROFESSIONAL ENGINEER

CRW ENGINEERING GROUP LLC
3940 ARCTIC BLVD. SUITE 300
ANCHORAGE, ALASKA 99503
PHONE: (907) 562-3252
FAX: (907) 561-2273

SAINT MARYS, ALASKA
WIND TURBINE PROJECT
DESIGN LOADS AND GENERAL NOTES

NO.	REVISION	BY	DATE

Plot Date 8/24/11
Designed TJF
Drawn JWC
Approved

Sheet No. S1
SHEET 1 OF 7

Q:\2011\WTG ST. MARYS\210089.01S1.dwg, 8/24/2011 4:52:10 PM, Bluebeam PDF
File: Q:\2011\WTG ST. MARYS\210089.01S1.dwg

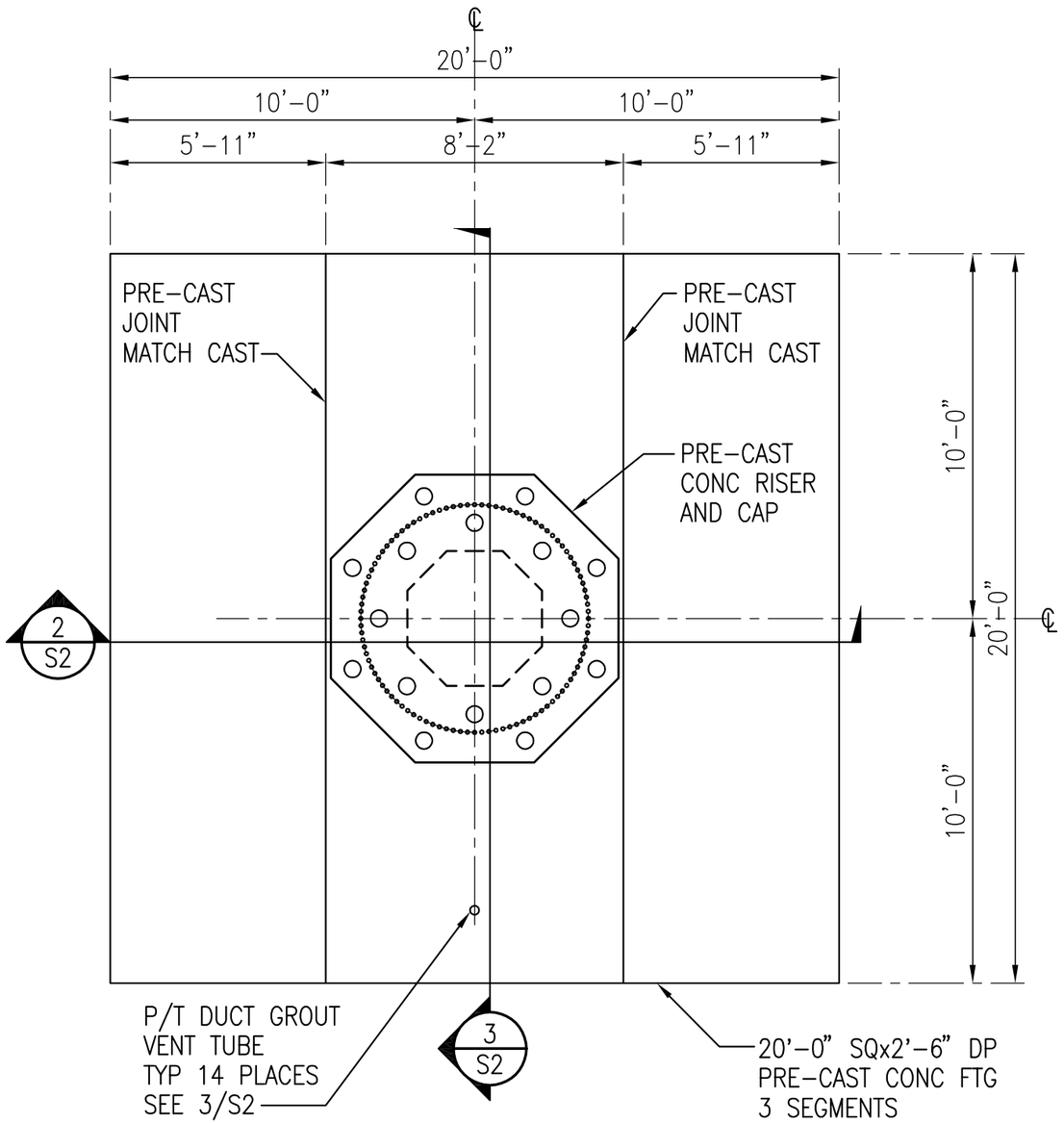

1 FOUNDATION PLAN

SCALE: 1/4" = 1'-0"

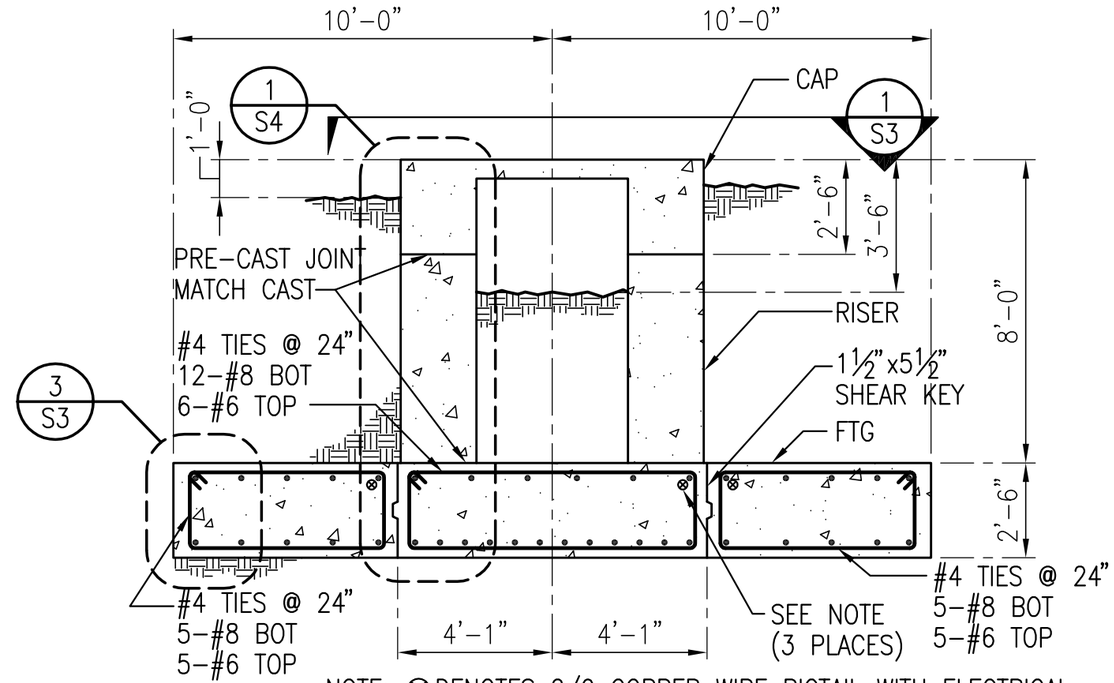

NOTE: ⊗ DENOTES 2/0 COPPER WIRE PIGTAIL WITH ELECTRICAL BOND TO #8 BAR. TYP 1 LOCATION AT EACH FTG SEGMENT.

2 SECTION

SCALE: 1/4" = 1'-0"

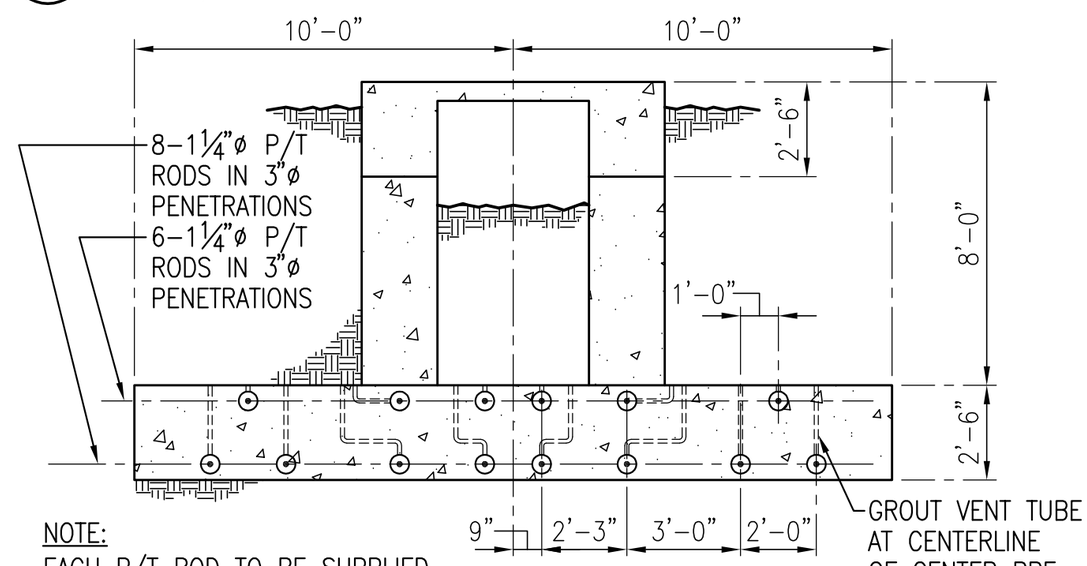

NOTE:
EACH P/T ROD TO BE SUPPLIED IN 3 SECTIONS WITH COUPLER AT EACH PRE-CAST JOINT.

3 SECTION

SCALE: 1/4" = 1'-0"

AVEC
ALASKA VILLAGE ELECTRIC COOPERATIVE
Anchorage, Alaska 99503
4831 Eagle Street

STATE OF ALASKA 49TH
TROY J. FELLER
Aug 24, 2011
CE 8381
REGISTERED PROFESSIONAL ENGINEER

CRW ENGINEERING GROUP LLC
3940 ARCTIC BLVD. SUITE 300
ANCHORAGE, ALASKA 99503
PHONE: (907) 562-3252
FAX: (907) 561-2273

SAINT MARYS, ALASKA
WIND TURBINE PROJECT
FOUNDATION PLAN

NO.	REVISION	BY	DATE

Plot Date 8/24/11
Designed TJF
Drawn JWC
Approved

Sheet No. S2
SHEET 2 OF 7

Q:\2011\WTG ST. MARYS\210089.01S2.dwg, 8/24/2011 4:51:22 PM, Bluebeam PDF
File: Q:\2011\WTG ST. MARYS\210089.01S2.dwg

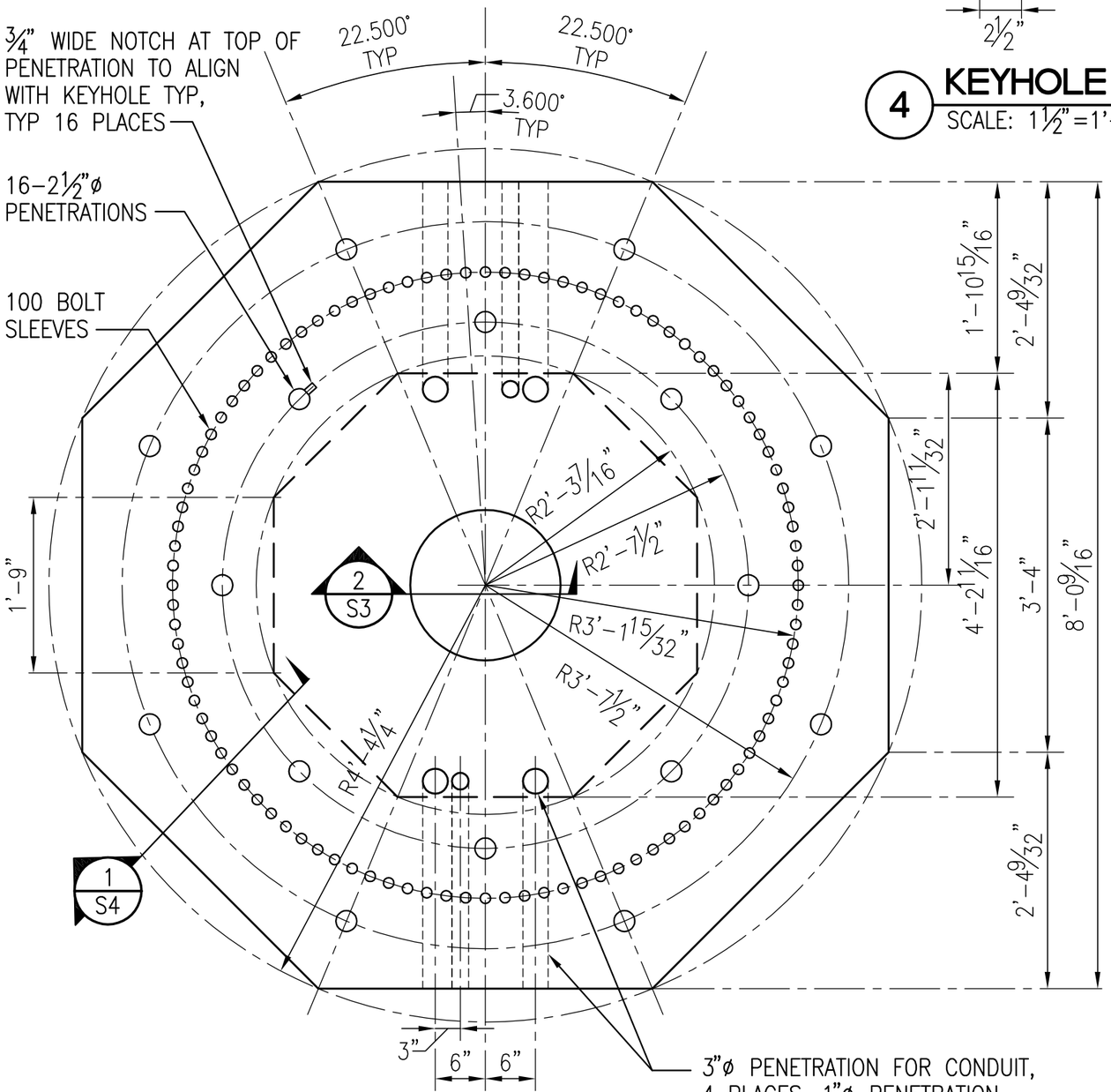

1 RISER / CAP PLAN
SCALE: 3/4" = 1'-0"

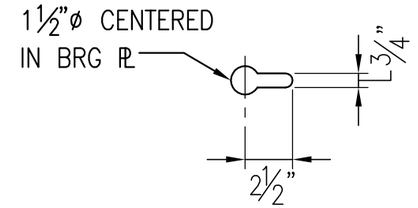

4 KEYHOLE
SCALE: 1½" = 1'-0"

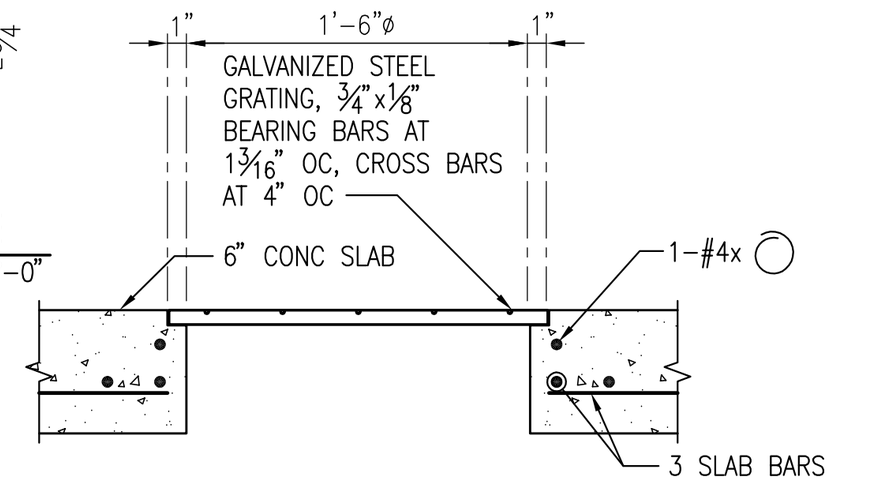

2 SLAB PENETRATION
SCALE: 1 1/2" = 1'-0"

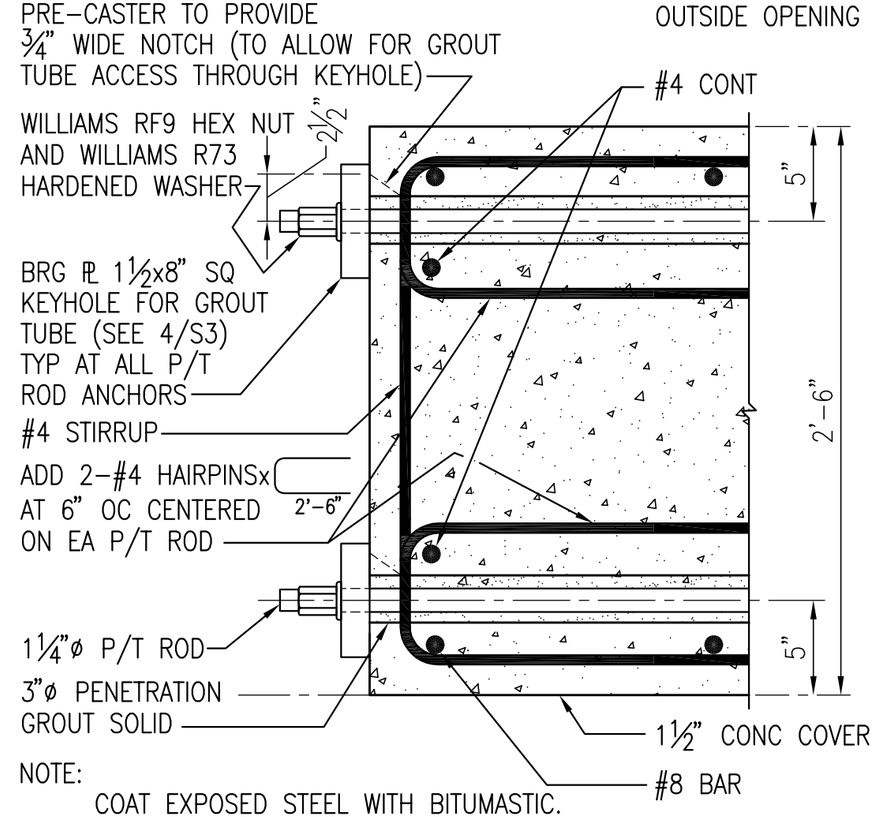

NOTE:
COAT EXPOSED STEEL WITH BITUMASTIC.

3 FOOTING DETAIL
SCALE: 1 1/2" = 1'-0"

AVEC
ALASKA VILLAGE ELECTRIC COOPERATIVE
Anchorage, Alaska 99503
4831 Eagle Street

STATE OF ALASKA 49TH
TROY J. FELLER
Aug 24, 2011
CE 8381
REGISTERED PROFESSIONAL ENGINEER

CRW ENGINEERING GROUP LLC
3940 ARCTIC BLVD, SUITE 300
ANCHORAGE, ALASKA 99503
PHONE: (907) 562-3252
FAX: (907) 561-2273

SAINT MARYS, ALASKA
WIND TURBINE PROJECT
FOUNDATION PLAN AND DETAIL

NO.	REVISION	BY	DATE

Plot Date 8/24/11
Designed TJF
Drawn JWC
Approved

Sheet No. S3
SHEET 3 OF 7

Q:\2011\WTG ST. MARYS\210089.01S3.dwg, 8/24/2011 4:50:58 PM, Bluebeam PDF
File: Q:\2011\WTG ST. MARYS\210089.01S3.dwg

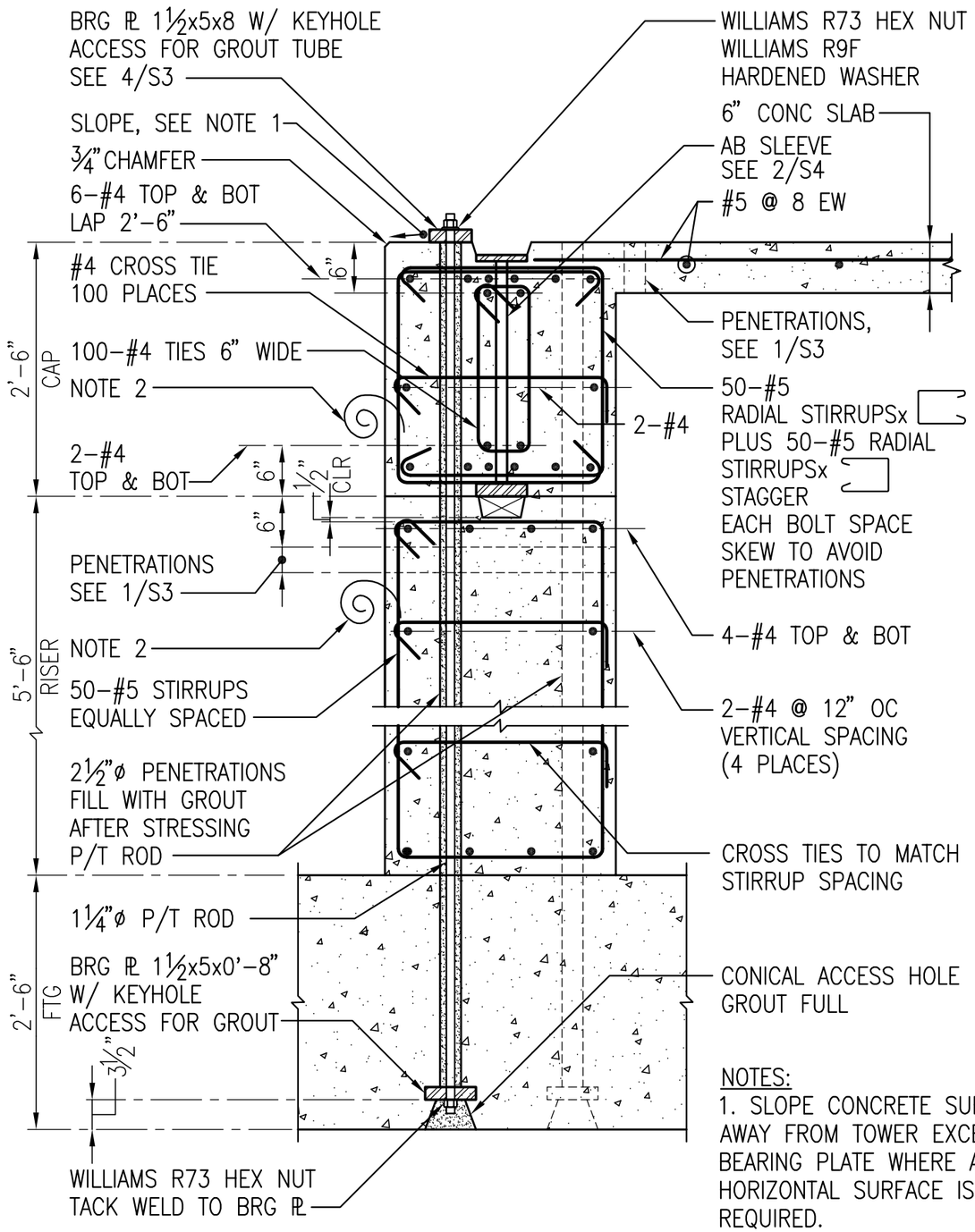

1 SECTION

SCALE: 3/4" = 1'-0"

NOTES:

1. SLOPE CONCRETE SURFACE AWAY FROM TOWER EXCEPT AT BEARING PLATE WHERE A HORIZONTAL SURFACE IS REQUIRED.

2. 2/0 COPPER WIRE PIGTAIL. ELECTRICAL BOND TO #5 BAR, TYP 1 LOCATION ON OUTSIDE OF RISER AND CAP.

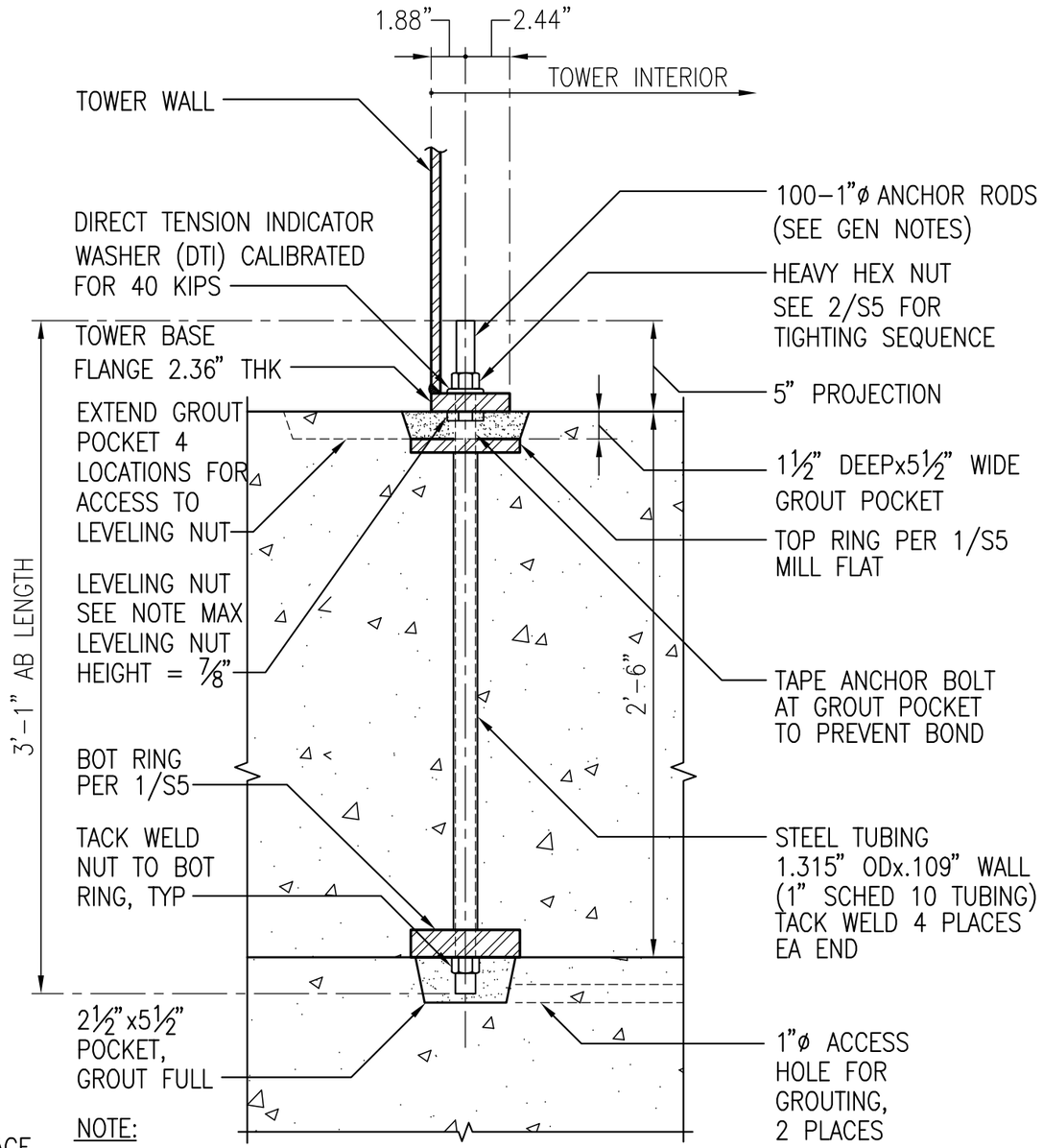

NOTE:

USE 4 LEVELING NUTS IN EQUALLY SPACED INTERVALS. GROUT UNDER TOWER AT ALL LOCATIONS EXCEPT LEVELING NUTS. AFTER GROUT HAS REACHED 2500 PSI, BACK DOWN LEVELING NUTS TO TOP RING. PLACE FOAM WASHER ABOVE LEVELING NUTS AND COMPLETE GROUTING. SEE NORTHWIND INSTALLATION INSTRUCTIONS SECTION 3.7 FOR MORE DETAILED DESCRIPTION. SEE 2/S5 FOR TIGHTENING SEQUENCE.

2 ANCHOR BOLT AND ANCHOR BOLT SLEEVE DETAIL

SCALE: 1 1/2" = 1'-0"

AVEC
ALASKA VILLAGE ELECTRIC COOPERATIVE
Anchorage, Alaska 99503
4831 Eagle Street

STATE OF ALASKA 49TH
TROY J. FELLER
Aug 24, 2011
CE 8381
REGISTERED PROFESSIONAL ENGINEER

CRW ENGINEERING GROUP LLC
3940 ARCTIC BLVD, SUITE 300
ANCHORAGE, ALASKA 99503
PHONE: (907) 562-3252
FAX: (907) 561-2273

SAINT MARYS, ALASKA
WIND TURBINE PROJECT
DETAILS

NO.	REVISION	BY	DATE

Plot Date 8/24/11
Designed TJF
Drawn JWC
Approved

Sheet No. S4
SHEET 4 OF 7

Q:\2011\WTG ST. MARYS\210089.01S4.dwg, 8/24/2011 4:50:32 PM, Bluebeam PDF
File: Q:\2011\WTG ST. MARYS\210089.01S4.dwg

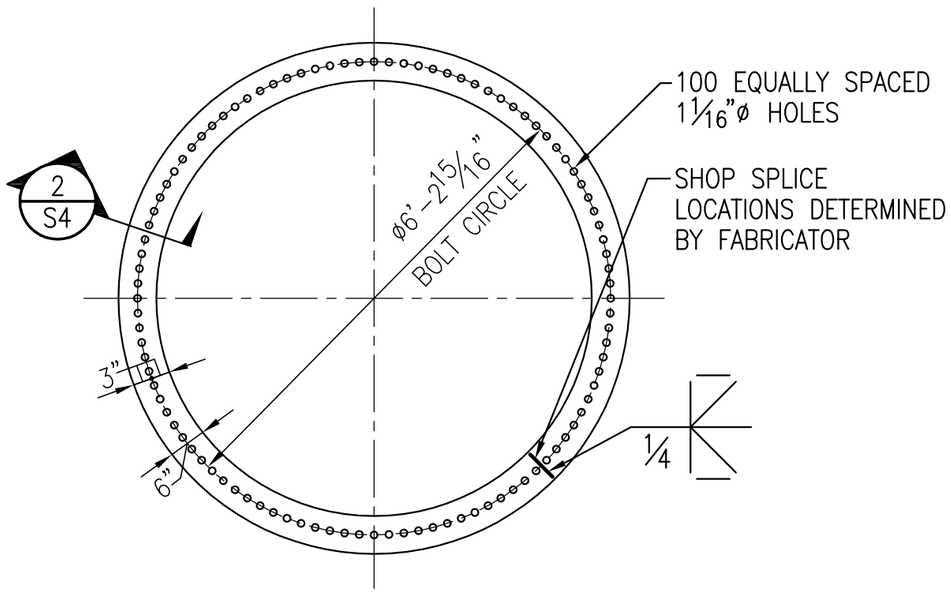

NOTES:

1. TOP RING PLATE THICKNESS = ¾".
2. BOTTOM RING PLATE THICKNESS = 1½".

1 EMBEDMENT RING

SCALE: 1/2" = 1'-0"

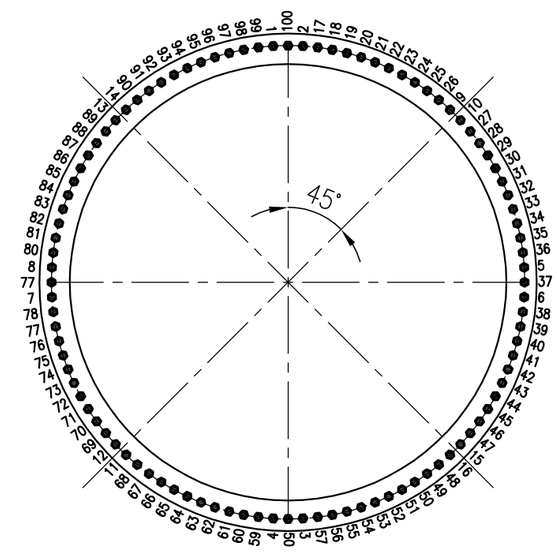

NOTE:

TIGHTEN ALL AB TO SNUG TIGHT, THEN FULLY TIGHTEN TO 42 KIP TENSION IN SEQUENCE SHOWN.

2 ANCHOR BOLT TIGHTENING SEQUENCE

SCALE: 1/2" = 1'-0"

AVEC
ALASKA VILLAGE ELECTRIC COOPERATIVE
Anchorage, Alaska 99503
4831 Eagle Street

STATE OF ALASKA
49TH
TROY J. FELLER
Aug 24, 2011
CE 8381
REGISTERED PROFESSIONAL ENGINEER

CRW ENGINEERING GROUP LLC
3940 ARCTIC BLVD. SUITE 300
ANCHORAGE, ALASKA 99503
PHONE: (907) 562-3252
FAX: (907) 561-2273

SAINT MARYS, ALASKA
WIND TURBINE PROJECT

EMBEDMENT DETAILS

NO.	REVISION	BY	DATE

Plot Date 8/24/11
Designed TJF
Drawn JWC
Approved

Sheet No. S5
SHEET 5 OF 7

Q:\2011\WTG ST. MARYS\210089.01S5.dwg, 8/24/2011 4:49:43 PM, Bluebeam PDF
File: Q:\2011\WTG ST. MARYS\210089.01S5.dwg

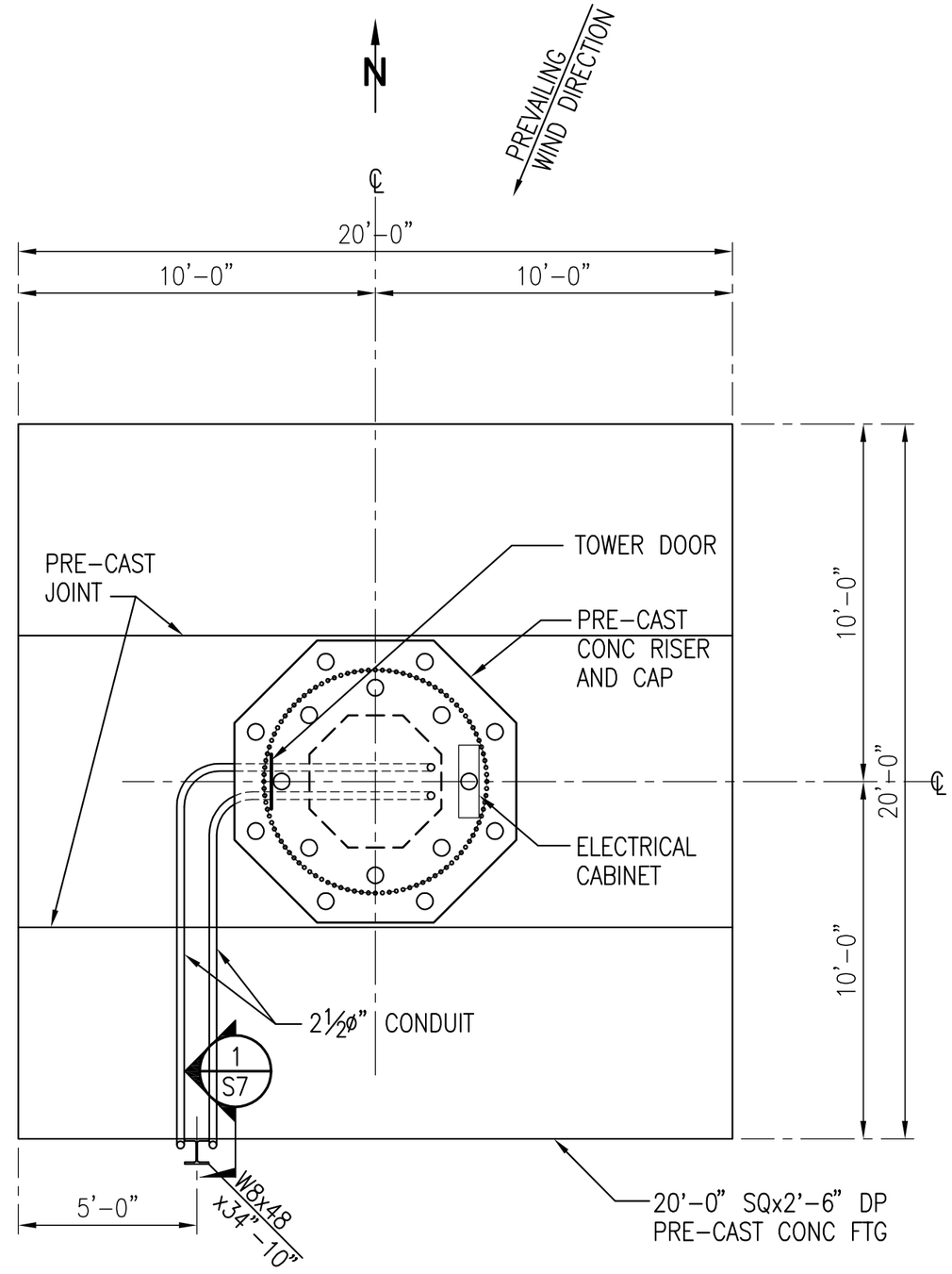

1 LAYOUT PLAN

SCALE: 1/4" = 1'-0"

AVEC
ALASKA VILLAGE ELECTRIC COOPERATIVE
Anchorage, Alaska 99503
4831 Eagle Street

STATE OF ALASKA
49TH
TROY J. FELLER
Aug 24, 2011
CE 8381
REGISTERED PROFESSIONAL ENGINEER

CRW ENGINEERING GROUP LLC
3940 ARCTIC BLVD. SUITE 300
ANCHORAGE, ALASKA 99503
PHONE: (907) 562-3252
FAX: (907) 561-2273

SAINT MARYS, ALASKA
WIND TURBINE PROJECT

LAYOUT PLAN AND SUPPORT DETAIL

NO.	REVISION	BY	DATE

Plot Date 8/24/11
Designed TJF
Drawn JWC
Approved

Sheet No. S6
SHEET 6 OF 7

File: Q:\2011\WTG ST. MARYS\210089.01S6.dwg
Q:\2011\WTG ST. MARYS\210089.01S6.dwg, 8/24/2011 4:48:30 PM, Bluebeam PDF

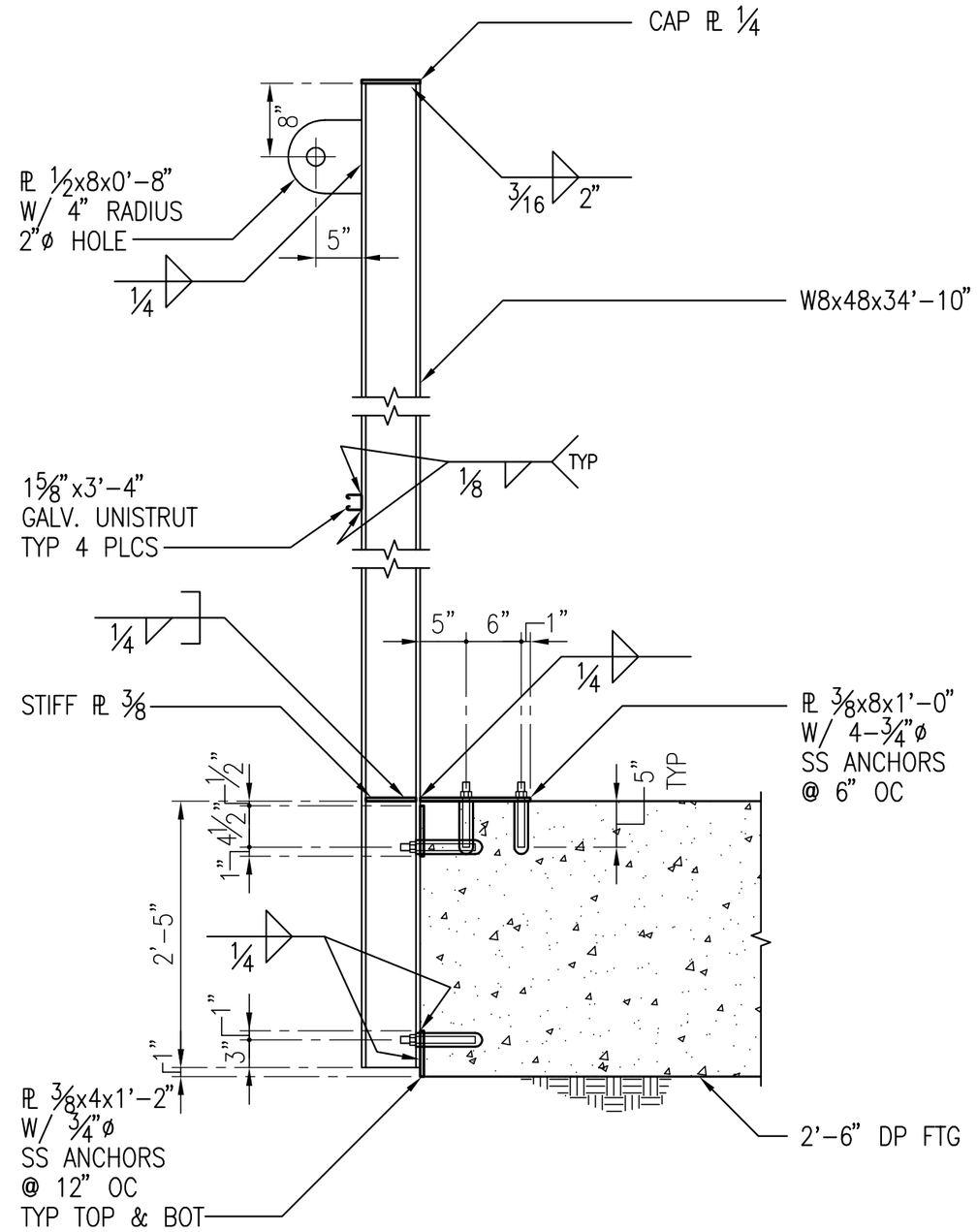

NOTES:
1. ALL STEEL HOT DIP GALVANIZED.
2. ANCHOR TO BE STAINLESS STEEL.

1 W8 MAST
SCALE: NTS

AVEC
ALASKA VILLAGE ELECTRIC COOPERATIVE
Anchorage, Alaska 99503
4831 Eagle Street

STATE OF ALASKA
49TH
TROY J. FELLER
Aug 24, 2011
CE 8381
REGISTERED PROFESSIONAL ENGINEER

CRW ENGINEERING GROUP LLC
3940 ARCTIC BLVD. SUITE 300
ANCHORAGE, ALASKA 99503
PHONE: (907) 562-3252
FAX: (907) 561-2273

SAINT MARYS, ALASKA
WIND TURBINE PROJECT
MAST DETAILS

NO.	REVISION	BY	DATE

Plot Date 8/24/11
Designed TJF
Drawn JWC
Approved

Sheet No. S7
SHEET 7 OF 7

File: Q:\2011\WTG ST. MARYS\210089.01S7.dwg
Q:\2011\WTG ST. MARYS\210089.01S7.dwg, 8/24/2011 4:52:44 PM, Bluebeam PDF

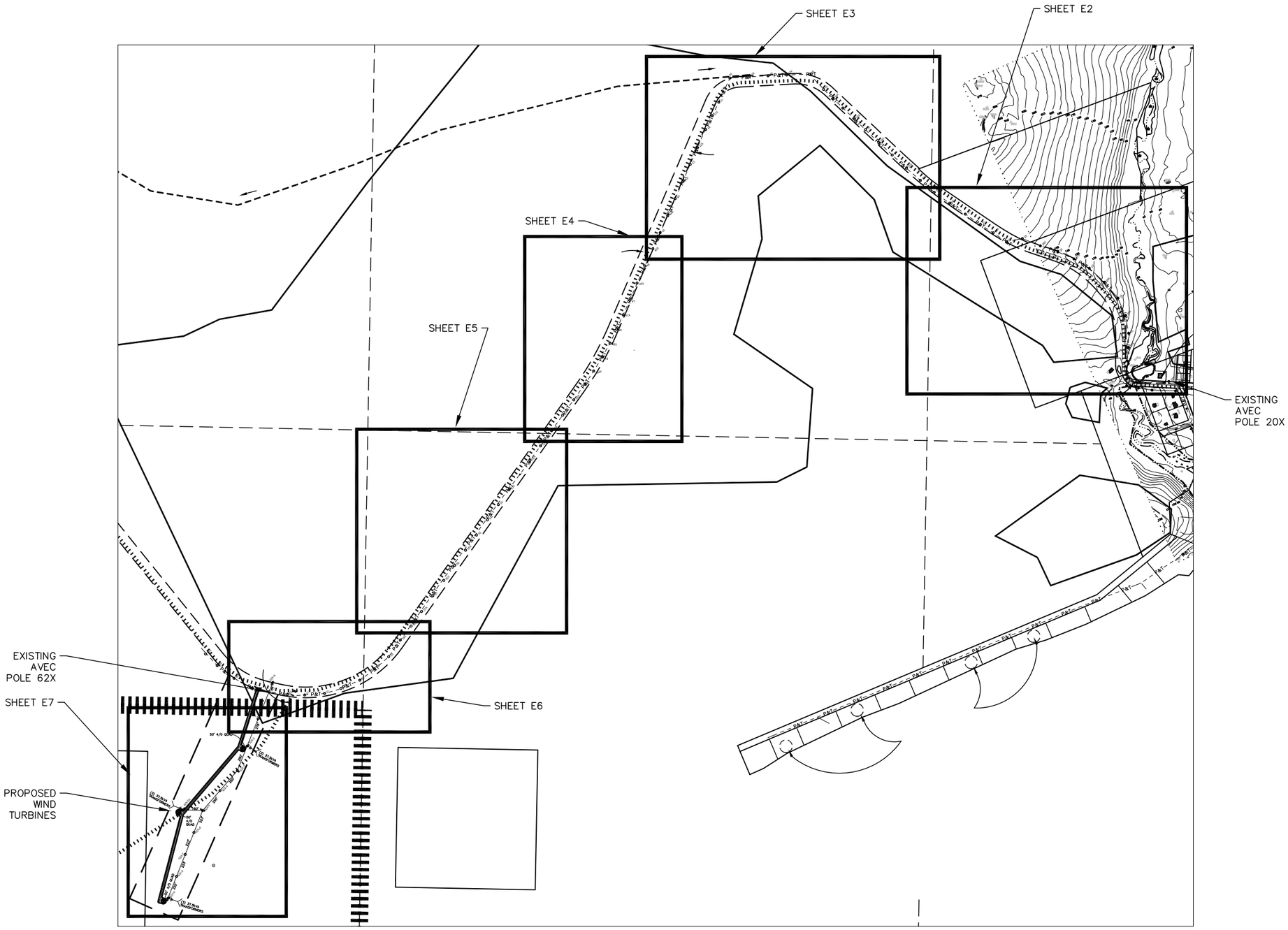

1 **ELECTRICAL REFERENCE PLAN**
SCALE: GRAPHIC

500 0 500 1000

GENERAL NOTES:

1. ALL WORK SHALL COMPLY WITH THE MOST RECENT EDITION OF THE NESC.
2. PROJECT SCOPE OF THE ELECTRICAL DISTRIBUTION IMPROVEMENTS WILL BE: TO PROVIDE THREE PHASE POWER TO THE NEW WIND TURBINE SITE SOUTH OF EXISTING AVEC POLE 62X. EXISTING AVEC POLE 20X IN SAINT MARYS IS THE CLOSEST THREE PHASE POLE TO THE SITE. FROM POLE 20X TO POLE 62X, THE CIRCUIT IS AN EXISTING TWO PHASE CIRCUIT; BETWEEN THOSE POLES, PROVIDE A FOURTH CONDUCTOR ON THE EXISTING POLE LINE TO CONVERT IT TO THREE PHASE FRAMING; AND FROM POLE 62X, EXTEND A NEW THREE PHASE POLE LINE TO THE WIND TURBINES. AND PROVIDE TRANSFORMER BANKS AND SECONDARY CIRCUITS TO THE WIND TOWERS AS INDICATED.
3. NUMBER NEW POLES PER M52-3.

AVEC
ALASKA VILLAGE ELECTRIC COOPERATIVE
Anchorage, Alaska 99503
4831 Eagle Street

STATE OF ALASKA
GREGORY ERRICO
EE 10279
REGISTERED PROFESSIONAL ENGINEER

CRW ENGINEERING GROUP LLC
3940 ARCTIC BLVD. SUITE 300
ANCHORAGE, ALASKA 99503
PHONE: (907) 562-3252
FAX: (907) 561-2273

SAINT MARYS, ALASKA
WIND TURBINE PROJECT
ELECTRICAL DISTRIBUTION IMPROVEMENTS
ELECTRICAL REFERENCE PLAN

NO.	REVISION	BY	DATE

Plot Date 10/22/11
Designed GME
Drawn MME
Approved

Sheet No. E1
SHEET – OF –

File: \\A-PC\Users\Public\G.ERRICO SHARED\crw\StMarys\St._Mary's_Preliminary_draftin\St Marys Base - 2007\30704_02 Base-EEE-3.dwg

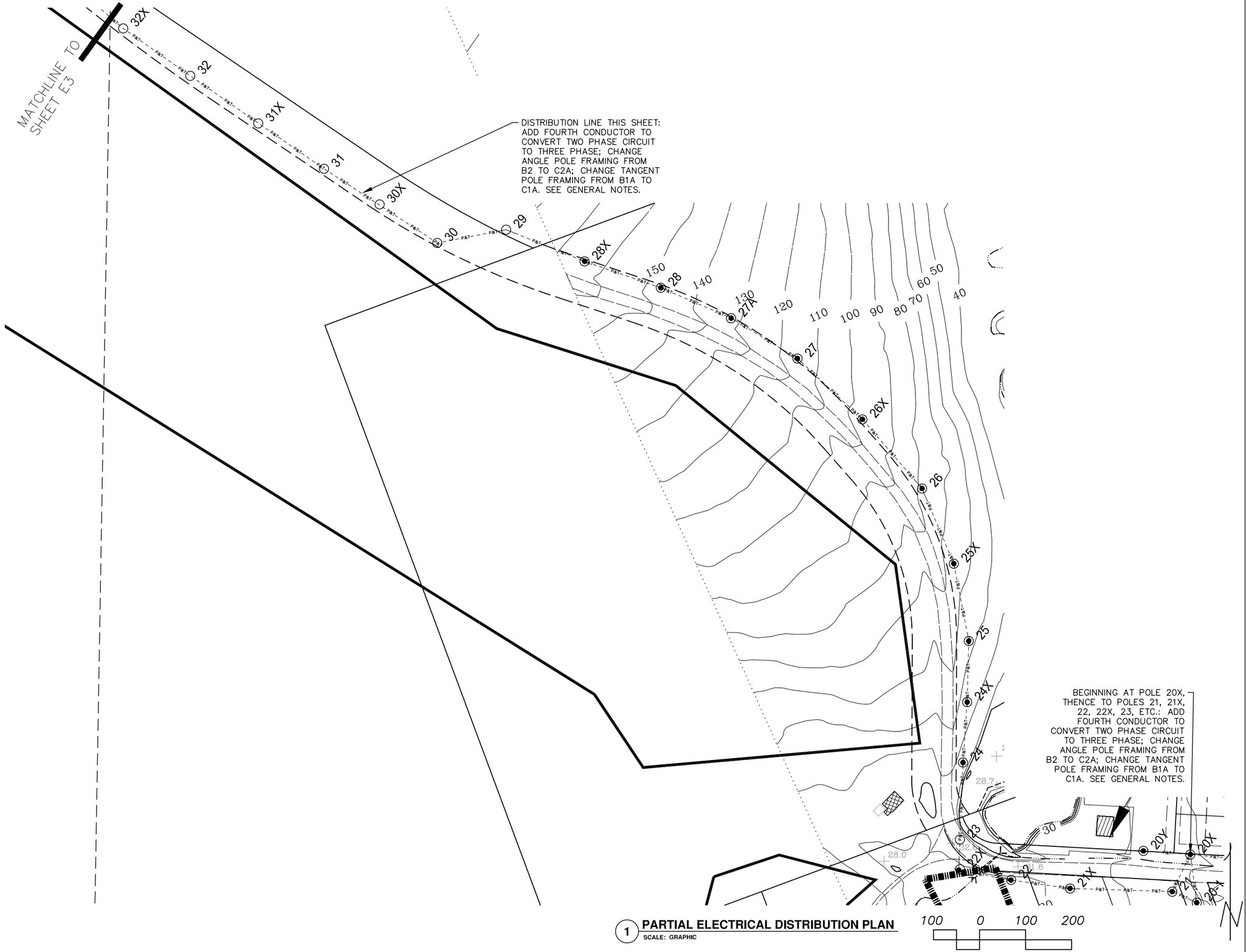

1 **PARTIAL ELECTRICAL DISTRIBUTION PLAN**
SCALE: GRAPHIC

AVEC
ALASKA VILLAGE ELECTRIC COOPERATIVE
Anchorage, Alaska 99503
4831 Eagle Street

STATE OF ALASKA
49TH
GREGORY ERRICO
EE 10279
REGISTERED PROFESSIONAL ENGINEER

CRW ENGINEERING GROUP LLC
3940 ARCTIC BLVD. SUITE 300
ANCHORAGE, ALASKA 99503
PHONE: (907) 562-3252
FAX: (907) 561-2273

SAINT MARYS, ALASKA
WIND TURBINE PROJECT
ELECTRICAL DISTRIBUTION IMPROVEMENTS
PARTIAL ELECTRICAL DISTRIBUTION PLAN

NO.	REVISION	BY	DATE

Plot Date 10/22/11
Designed GME
Drawn MME
Approved

Sheet No. E2
SHEET – OF –

File: \\A-PC\Users\Public\G.ERRICO SHARED\crw\StMarys\St._Mary's_Preliminary_drafting\St Marys Base – 2007\30704_02 Base-EEE-3.dwg

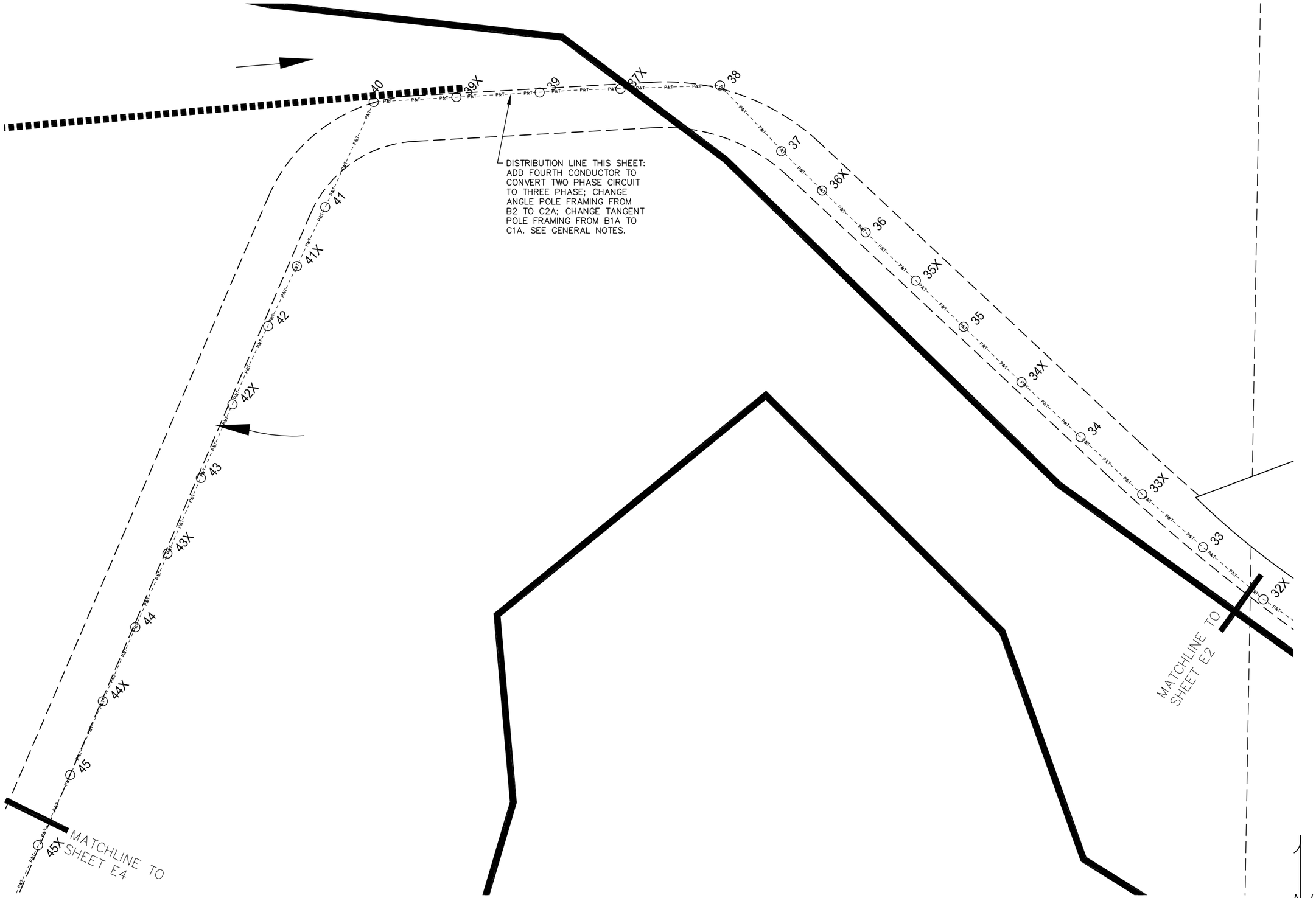

1 **PARTIAL ELECTRICAL DISTRIBUTION PLAN**
SCALE: GRAPHIC

AVEC
ALASKA VILLAGE ELECTRIC COOPERATIVE
Anchorage, Alaska 99503
4831 Eagle Street

STATE OF ALASKA
GREGORY ERRICO
EE 10279
REGISTERED PROFESSIONAL ENGINEER

CRW ENGINEERING GROUP LLC
3940 ARCTIC BLVD. SUITE 300
ANCHORAGE, ALASKA 99503
PHONE: (907) 562-3252
FAX: (907) 561-2273

SAINT MARYS, ALASKA
WIND TURBINE PROJECT
ELECTRICAL DISTRIBUTION IMPROVEMENTS
PARTIAL ELECTRICAL DISTRIBUTION PLAN

NO.	REVISION	BY	DATE

Plot Date 10/22/11
Designed GME
Drawn MME
Approved

Sheet No. E3
SHEET ___ OF ___

File: \\A-PC\Users\Public\G.ERRICO SHARED\crw\StMarys\St._Mary's_Preliminary_drafting\St Marys Base - 2007\30704_02 Base-EEE-3.dwg

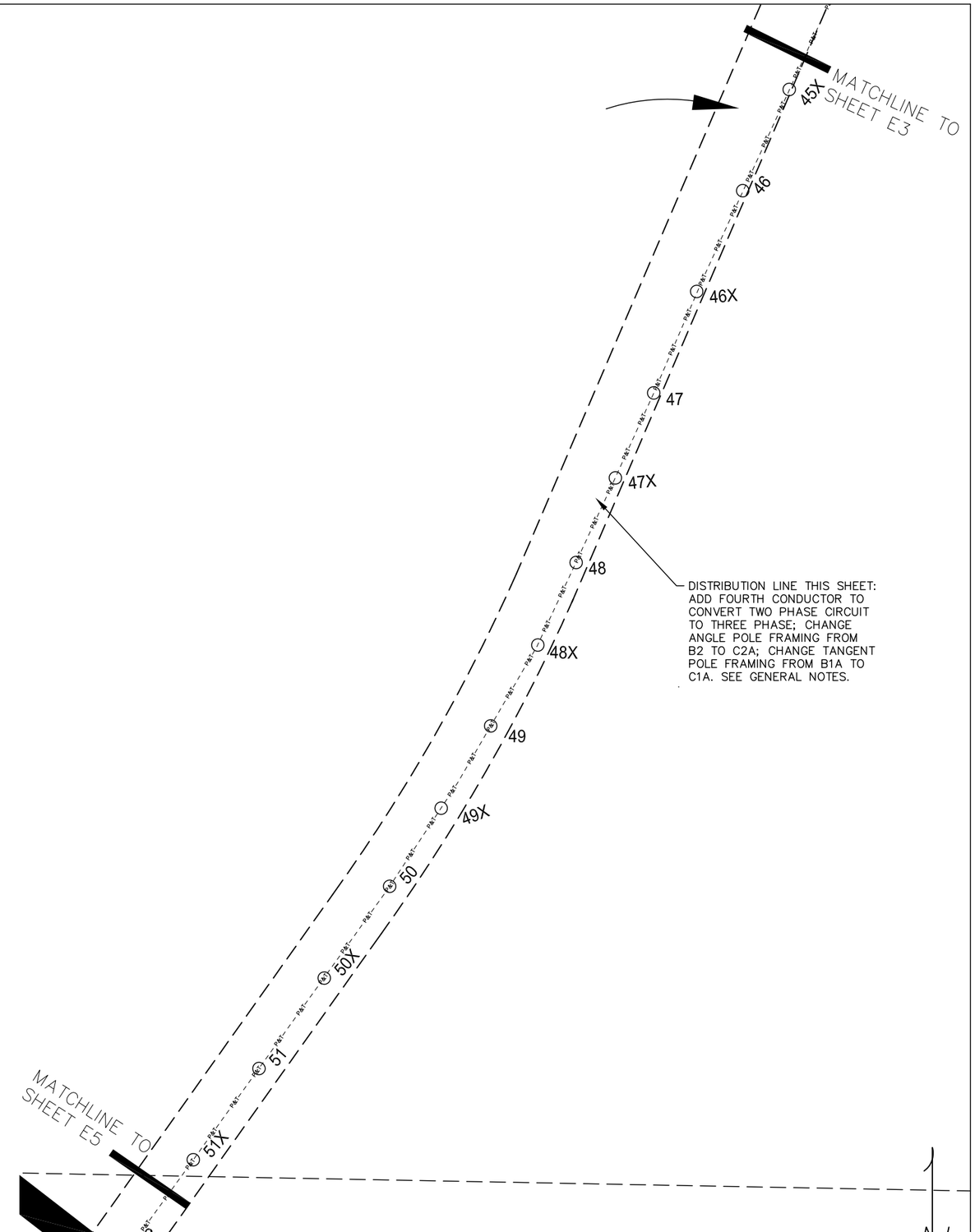

1 **PARTIAL ELECTRICAL DISTRIBUTION PLAN**
SCALE: GRAPHIC

AVEC
ALASKA VILLAGE ELECTRIC COOPERATIVE
4831 Eagle Street
Anchorage, Alaska 99503

STATE OF ALASKA
49TH
GREGORY ERRICO
EE 10279
REGISTERED PROFESSIONAL ENGINEER

CRW ENGINEERING GROUP LLC
3940 ARCTIC BLVD. SUITE 300
ANCHORAGE, ALASKA 99503
PHONE: (907) 562-3252
FAX: (907) 561-2273

SAINT MARYS, ALASKA
WIND TURBINE PROJECT
ELECTRICAL DISTRIBUTION IMPROVEMENTS
PARTIAL ELECTRICAL DISTRIBUTION PLAN

NO.	REVISION	BY	DATE

Plot Date 10/22/11
Designed GME
Drawn MME
Approved

Sheet No. E4
SHEET ___ OF ___

File: \\A-PC\Users\Public\G.ERRICO SHARED\crw\StMarys\St._Mary's_Preliminary_draftin\St Marys Base - 2007\30704_02 Base-EEE-3.dwg

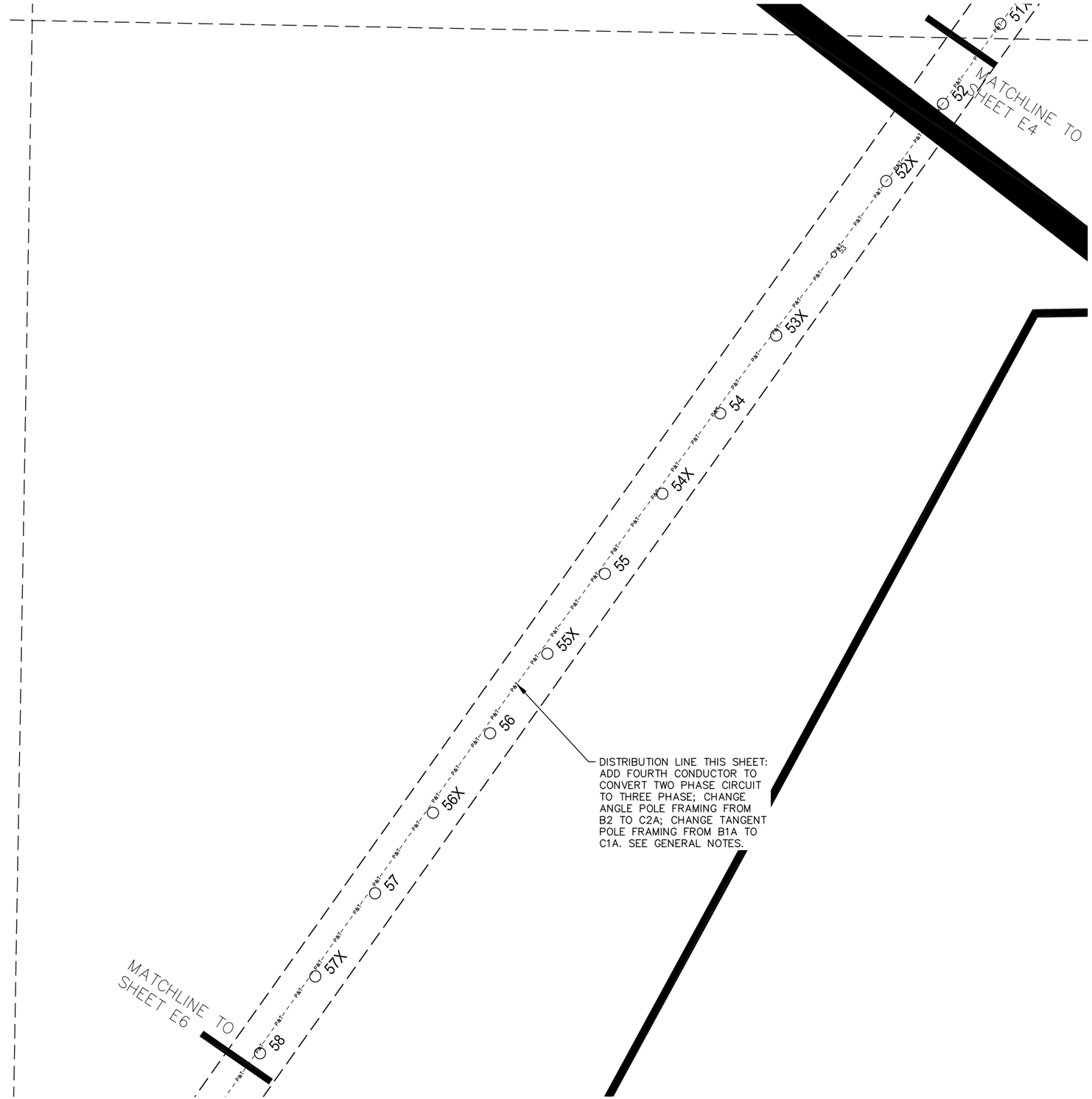

1 **PARTIAL ELECTRICAL DISTRIBUTION PLAN**
SCALE: GRAPHIC

AVEC
ALASKA VILLAGE ELECTRIC COOPERATIVE
Anchorage, Alaska 99503
4831 Eagle Street

STATE OF ALASKA
49TH
GREGORY ERRICO
EE 10279
REGISTERED PROFESSIONAL ENGINEER

CRW ENGINEERING GROUP LLC
3940 ARCTIC BLVD. SUITE 300
ANCHORAGE, ALASKA 99503
PHONE: (907) 562-3252
FAX: (907) 561-2273

SAINT MARYS, ALASKA
WIND TURBINE PROJECT
ELECTRICAL DISTRIBUTION IMPROVEMENTS
PARTIAL ELECTRICAL DISTRIBUTION PLAN

NO.	REVISION	BY	DATE

Plot Date 10/22/11
Designed GME
Drawn MME
Approved

Sheet No. E5
SHEET – OF –

File: \\A-PC\Users\Public\G.ERRICO SHARED\crw\StMarys\St._Mary's_Preliminary_draftin\St Marys Base – 2007\30704_02 Base-EEE-3.dwg

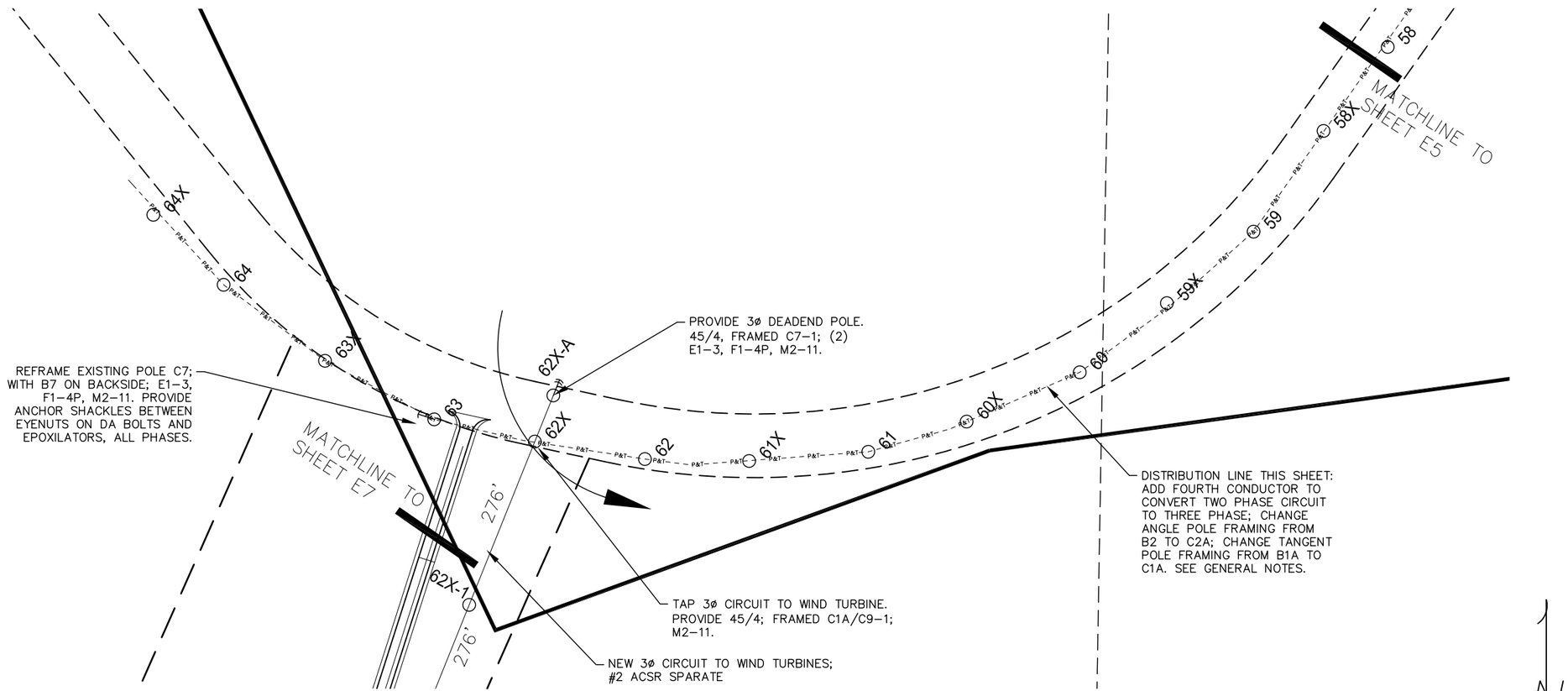

1 **PARTIAL ELECTRICAL DISTRIBUTION PLAN**
SCALE: GRAPHIC

AVEC
ALASKA VILLAGE ELECTRIC COOPERATIVE
Anchorage, Alaska 99503
4831 Eagle Street

STATE OF ALASKA
49TH
GREGORY ERRICO
EE 10279
REGISTERED PROFESSIONAL ENGINEER

CRW ENGINEERING GROUP LLC
3940 ARCTIC BLVD. SUITE 300
ANCHORAGE, ALASKA 99503
PHONE: (907) 562–3252
FAX: (907) 561–2273

SAINT MARYS, ALASKA
WIND TURBINE PROJECT
ELECTRICAL DISTRIBUTION IMPROVEMENTS
PARTIAL ELECTRICAL DISTRIBUTION PLAN

NO.	REVISION	BY	DATE

Plot Date 10/22/11
Designed GME
Drawn MME
Approved

Sheet No. E6
SHEET – OF –

File: \\A-PC\Users\Public\G.ERRICO SHARED\crw\StMarys\St._Mary's_Preliminary_drafting\St Marys Base – 2007\30704_02 Base-EEE-3.dwg

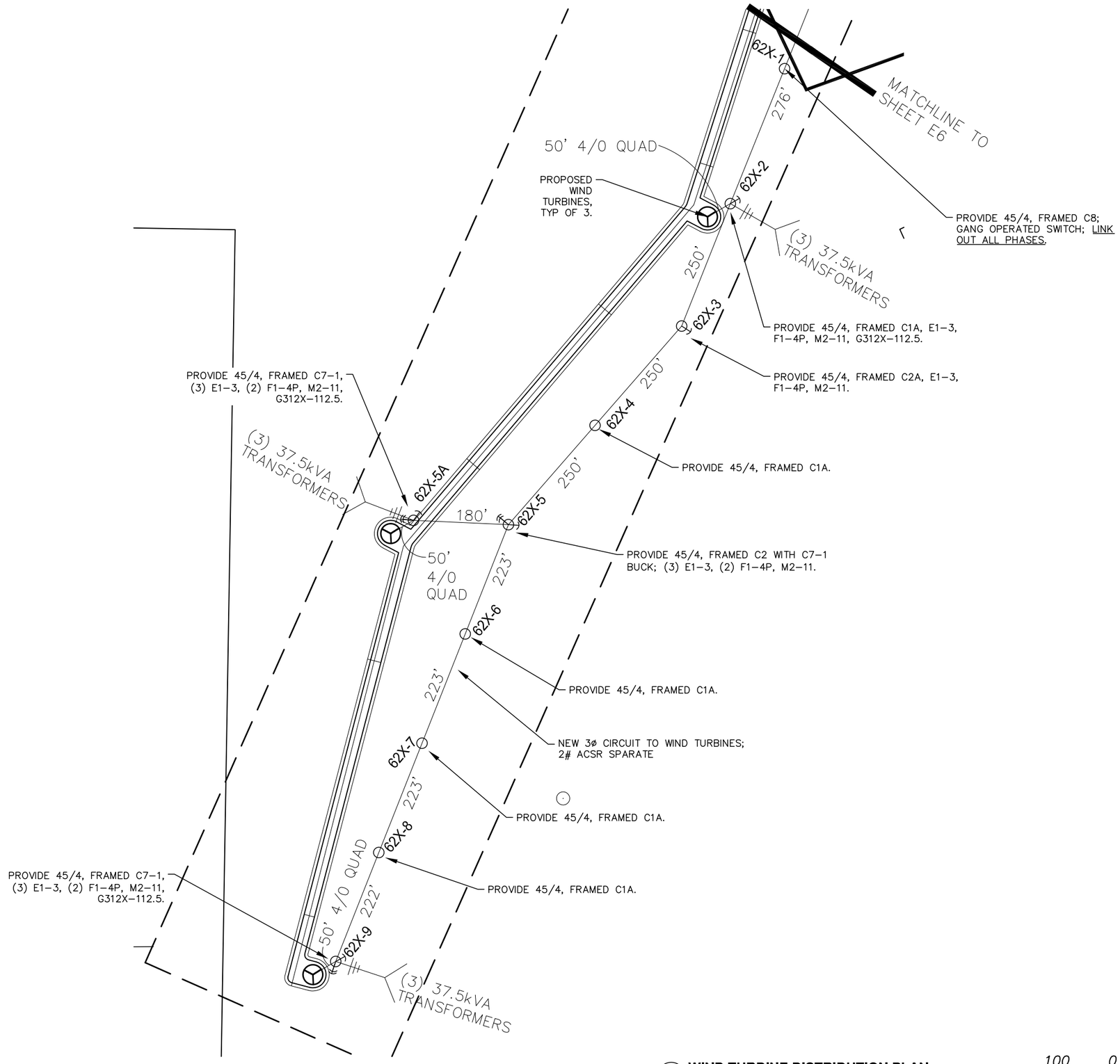

1 **WIND TURBINE DISTRIBUTION PLAN**
SCALE: GRAPHIC

100 0 100 200

AVEC
ALASKA VILLAGE ELECTRIC COOPERATIVE
Anchorage, Alaska 99503
4831 Eagle Street

STATE OF ALASKA
GREGORY ERRICO
EE 10279
REGISTERED PROFESSIONAL ENGINEER

CRW ENGINEERING GROUP LLC
3940 ARCTIC BLVD. SUITE 300
ANCHORAGE, ALASKA 99503
PHONE: (907) 562-3252
FAX: (907) 561-2273

SAINT MARYS, ALASKA
WIND TURBINE PROJECT
ELECTRICAL DISTRIBUTION IMPROVEMENTS
WIND TURBINE DISTRIBUTION PLAN

NO.	REVISION	BY	DATE

Plot Date 10/21/11
Designed GME
Drawn MME
Approved

Sheet No. E7
SHEET — OF —

File: \\A-PC\Users\Public\G.ERRICO SHARED\crw\StMarys\St._Mary's_Preliminary_draftin\St Marys Base - 2007\30704_02 Base-EEE-2.dwg

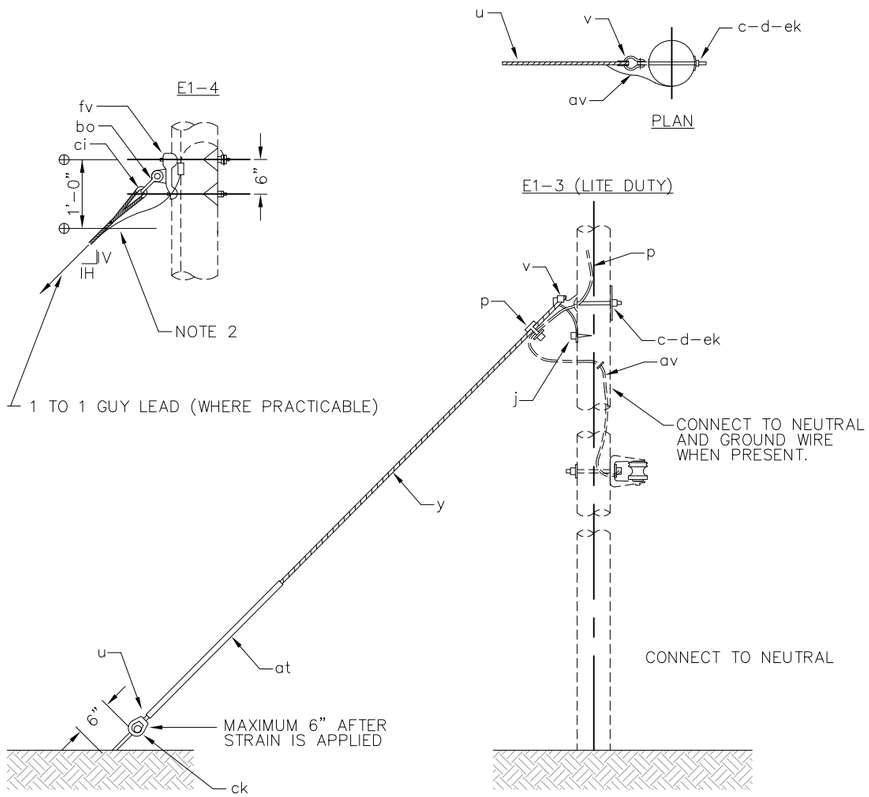

NOTES:
1. FORMED TYPE GRIPS MAY BE USED ONLY WITH SUITABLE ATTACHMENTS, (ITEM V) RECOMMENDED BY GRIP MANUFACTURER.
2. THE LOWER POINT (⊕) IS FOR LOCATIONS WHERE TWO GUY ATTACHMENTS ARE REQUIRED.
3. WHERE SEPARATE ANCHORS ARE INSTALLED THE MINIMUM SEPARATION SHALL BE FIVE FEET.
4. SPACING BETWEEN ANCHORS SHALL BE SUFFICIENT TO PROVIDE MAXIMUM HOLDING POWER OF EACH ANCHOR.
5. FOR LOOSE SOILS, CONCRETE OR OTHER, POLE FOOTINGS MAY BE REQUIRED.

MATERIAL LIST

Item	QUANTITY E1-3	QUANTITY E1-4	DESCRIPTION
c	1	2	BOLT, MACHINE, 3/4" X REQ'D LENGTH
d	1	2	WASHER, 4" SQUARE, 3/8 THICK, CURVED WITH 13/16" HOLE
ek	1	2	LOCKNUTS, 3/4:
j	1		SCREW, LAG 1/2' x 4"
p	–	–	CONNECTORS, COMPRESSION, AS REQUIRED
u	2	4	DEADEND, PREFORMED, GUY
v	1		GUY ATTACHMENT (8,500 lbs.)
fv		1	GUY ATTACHMENT, 60,000 LB (3/4" BOLT, 6" SPACING)
y	–	–	GUY STRAND, 7/16, GALVANIZED STEEL STRAND, EHS, AS REQUIRED
al	–	–	STAPLES, GROUND WIRE, AS REQUIRED
av	–	–	JUMPERS, GOUNDING, AS REQUIRED, #6 BARE SOLID COPPER
at	1	1	GUY MARKER, 96" (ORANGE AND YELLOW OR SOLID ORANGE)
ck	1	1	CLAMP, ANCHOR ROD, BONDING
ci		2	THIMBLE, SIZED FOR GUY AND SHACKLE
bo		1	SHACKLE, ANCHOR, 7/8" (50,000 LBS)

3 E1-3 SCALE: NTS

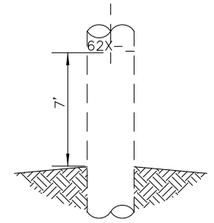

4 M52-3 SCALE: NTS

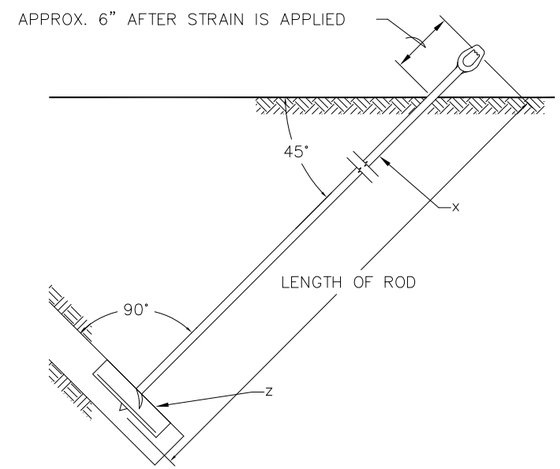

QUANTITY	ANCHOR TYPE – STEEL PLATE ULTIMATE CAPACITY, CLASS 6 SOIL 16,000 LBS.	
1	ANCHOR – PLATE. 400 SQ. IN	
1	ROD, ANCHOR, TRIPLE EYE	

NOTES:
1. RECOMMENDED MINIMUM PROJECTION AFTER PRELOADING IS 6 INCHES. PROJECTION MAY BE INCREASED TO AVOID OVERTORQUING OF THE SHAFT.
2. THE ANCHOR ROD, NUTS, AND PLATE SHALL BE HOT DIPPED GALVANIZED IN ACCORDANCE WITH ASTM A153.
3. CONTRACTOR SHALL INSTALL ANCHORS IN ACCORDANCE WITH MANUFACTURER'S RECOMMENDATIONS.

MATERIAL LIST

NO.	DESCRIPTION
x	ROD, ANCHOR, TWIN EYE, 3/4" x 8'-0"
z	ANCHOR, PLATE, 400 SQ. IN.

2 F1-4P SCALE: NTS

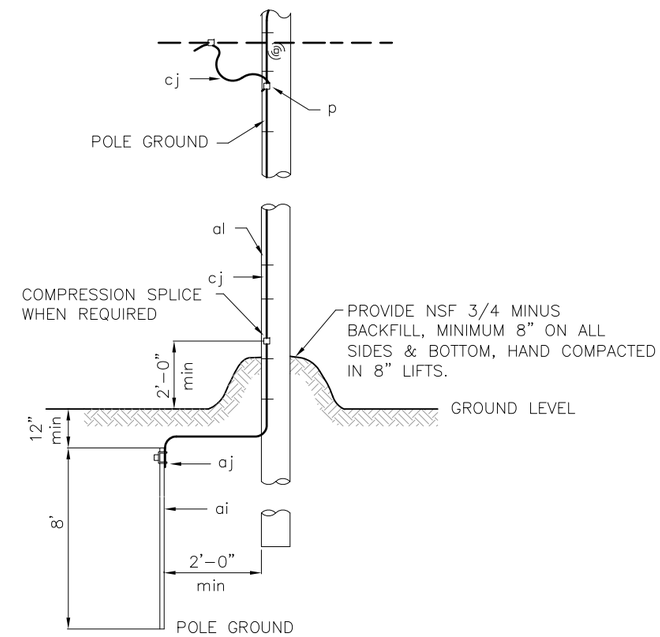

NOTES:
1. POLE GROUND WIRE TO BE LOCATED ON SAME SIDE AS NEUTRAL CONDUCTOR AND IN QUADRANT OPPOSITE CLIMBING SPACE AND ON SIDE OF RISER.
2. STAPLES ON GROUND WIRES SHALL BE 2'-0" APART. EXCEPT FOR A DISTANCE OF 8'-0" ABOVE GROUND AND 8'-0" FROM TOP OF POLE, WHERE THEY SHALL BE 6" APART.
3. GROUND WIRE TO CLEAR ALL HARDWARE BY 2" MINIMUM, AND SHALL BE STAPLED TO MAINTAIN THIS POSITION.
4. GROUND ARRESTORS, TERMINATIONS, ALUMAFORM BRACKET AND RISER PIPE TO POLE GROUND.
5. DOUBLE GROUND RISER PIPE TO POLE GROUND.

MATERIAL LIST

Item	NO.	DESCRIPTION
p	as req'd	CONNECTOR, COMPRESSION
ai	1	ROD, GROUND, COPPER-CLAD STEEL, 5/8" MIN. X 8'
aj	1	GROUND ROD CLAMP
al	AS REQ'D	STAPLES, COPPER
al	1	GROUND WIRE CLIP
cj	AS REQ'D	GROUND WIRE, #6 COPPER
av	AS REQ'D	JUMPER, COPPER

1 M2-11 SCALE: NTS

AVEC
ALASKA VILLAGE ELECTRIC COOPERATIVE
Anchorage, Alaska 99503
4831 Eagle Street

STATE OF ALASKA
GREGORY ERRICO
EE 10279
REGISTERED PROFESSIONAL ENGINEER

CRW ENGINEERING GROUP LLC
3940 ARCTIC BLVD. SUITE 300
ANCHORAGE, ALASKA 99503
PHONE: (907) 562-3252
FAX: (907) 561-2273

SAINT MARYS, ALASKA
WIND TURBINE PROJECT
ELECTRICAL DISTRIBUTION IMPROVEMENTS

DETAILS

NO.	REVISION	BY	DATE

Plot Date 10/21/11
Designed GME
Drawn MME
Approved

Sheet No. E8
SHEET – OF –

File: \\A-PC\Users\Public\G.ERRICO SHARED\crw\StMarys\St._Mary's_Preliminary_drafting\St Marys Base - 2007\30704_02 Base-EEE-2.dwg

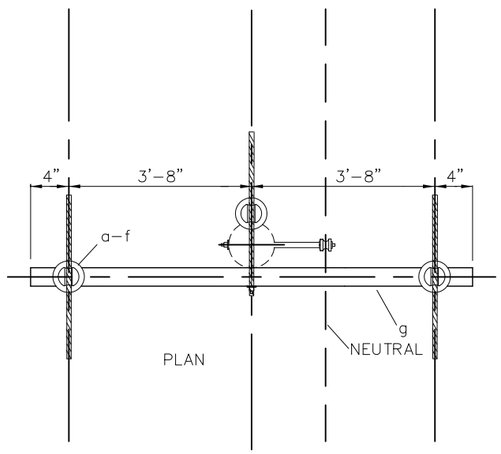

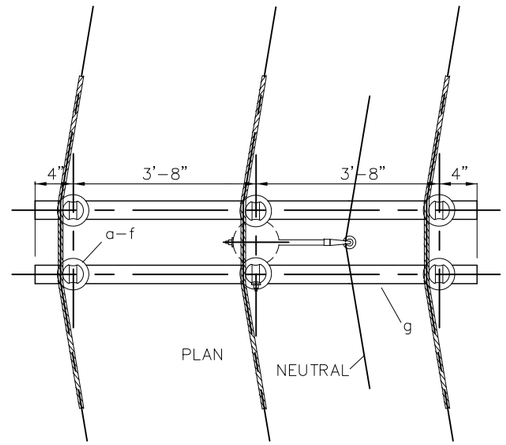

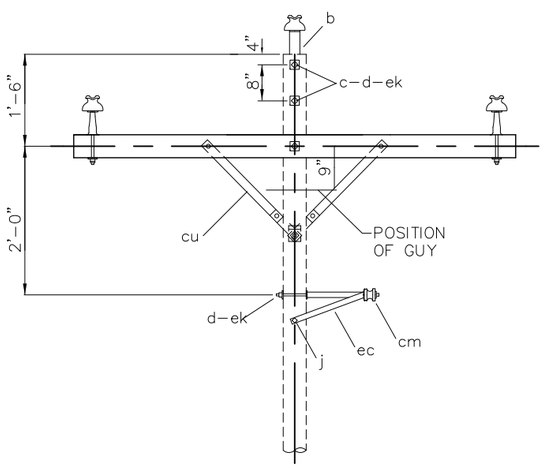

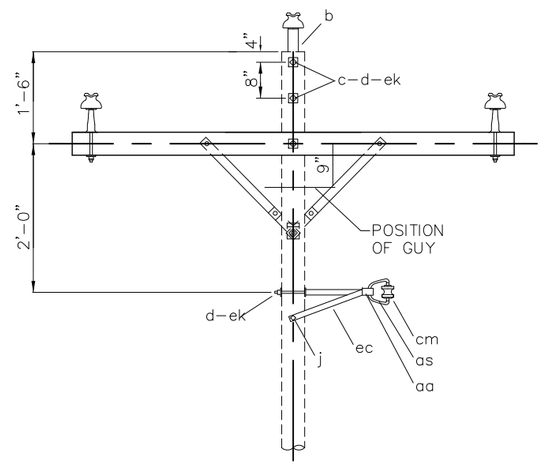

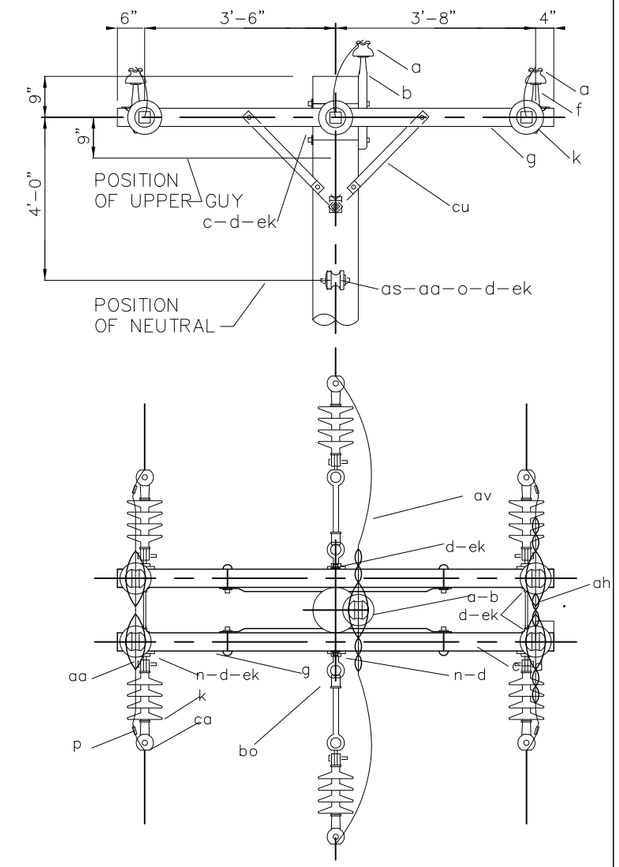

PLAN

MATERIAL LIST		
NO.	Qty.	DESCRIPTION
a	3	INSULATOR, PIN TYPE, F-NECK
b	1	PIN, POLE TOP, 20"
c	2	BOLT, CARRIAGE, 3/8" x 4 1/2"
c	3	BOLT, MACHINE, 5/8"XREQ'D LENGTH
d	4	WASHER, 2-1/4" SQUARE WITH 11/16" HOLE
f	2	PIN, CROSSARM, STEEL
g	1	CROSSARM, 3-3/4" X 4-3/4" X 8'-0"
j	3	SCREW, LAG, 1/2" x 4"
cm	1	INSULATOR, SPOOL, 3"
cu	2	BRACE, WOOD, 28"
ec	1	BRACKET, OFFSET NEUTRAL
ek	–	LOCKNUTS, AS REQUIRED
	4	ARMOR, ROD, SET
	3	TIE, WRAPLOCK, F-NECK, SINGLE SUPPORT
	1	TIE, WRAPLOCK, NEUTRAL

4 **C1A** SCALE: NTS

MATERIAL LIST		
NO.	Qty.	DESCRIPTION
a	6	INSULATOR, PIN TYPE, F-NECK
b	2	PIN, POLE TOP, 20"
i	4	BOLT, CARRIAGE, 3/8" x 4 1/2"
c	4	BOLT, MACHINE, 5/8"XREQ'D LENGTH
d	13	WASHER, 2-1/4" SQUARE WITH 11/16" HOLE
f	4	PIN, CROSSARM, STEEL
g	2	CROSSARM, 3-3/4" X 4-3/4" X 8'-0"
j	3	SCREW, LAG, 1/2" x 4"
cm	1	INSULATOR, SPOOL, 3"
cu	4	BRACE, WOOD, 28"
ec	1	BRACKET, OFFSET NEUTRAL
ek	–	LOCKNUTS, AS REQUIRED
	4	ARMOR, ROD, SET
	3	TIE, WRAPLOCK, F-NECK, DOUBLE SUPPORT
	1	TIE, WRAPLOCK, NEUTRAL

3 **C2A** SCALE: NTS

2 **C7-1** SCALE: NTS

MATERIAL LIST		
Item	NO.	DESCRIPTION
a	5	INSULATOR, PIN TYPE, 15 kV
ah		#4 SOLID ALUMINUM TIE WIRE, AS REQUIRED
aa	9	NUT, EYE, 5/8"
as	1	LARGE SPOOL INSULATOR WITH SWINGING CLEVIS
av		JUMPERS, #2 ACSR, AS REQUIRED
b	1	PIN, POLE TOP, 20"
c	4	BOLT, MACHINE, 1/2" X 6"
c	3	BOLT, MACHINE, 5/8" X REQ'D LENGTH
ca	6	DEADEND ASSEMBLY, PRIMARY AUTOMATIC
cc	2	DEADEND ASSEMBLY, NEUTRAL AUTOMATIC
cu	4	BRACE, WOOD, 60" SPAN, PAIR
d	4	WASHER, ROUND, 1-3/8" (9/16" HOLE)
d	12	WASHER, 2-1/4" SQUARE (11/16" HOLE)
d	2	WASHER, 3" SQUARE, CURVED (11/16" HOLE)
ek		LOCKNUTS, AS REQUIRED
f	4	PIN, CROSSARM TYPE
g	2	CROSSARM, 3-5/8"X4-5/8"X8'-0",
k	6	INSULATOR, POLYMER, SUSPENSION, 15 kV, (15,000 lb)
n	3	BOLT, DOUBLE ARMING, 5/8" X REQ'D LENGTH
o	3	BOLT, EYE, 5/8" X REQ'D LENGTH
p		CONNECTOR (COMPRESSION TYPE) AS REQUIRED
bo	2	SHACKLE, ANCHOR

1 **C8** SCALE: NTS

AVEC
ALASKA VILLAGE ELECTRIC COOPERATIVE
Anchorage, Alaska 99503
4831 Eagle Street

STATE OF ALASKA
GREGORY ERRICO
EE 10279
REGISTERED PROFESSIONAL ENGINEER

CRW ENGINEERING GROUP LLC
3940 ARCTIC BLVD. SUITE 300
ANCHORAGE, ALASKA 99503
PHONE: (907) 562-3252
FAX: (907) 561-2273

SAINT MARYS, ALASKA
WIND TURBINE PROJECT
ELECTRICAL DISTRIBUTION IMPROVEMENTS

DETAILS

NO.	REVISION	BY	DATE

Plot Date 10/21/11
Designed GME
Drawn MME
Approved

Sheet No. E9
SHEET – OF –

File: \\A-PC\Users\Public\G.ERRICO SHARED\crw\StMarys\St._Mary's_Preliminary_draftin\St Marys Base - 2007\30704_02 Base-EEE-2.dwg

NOTE: LINK OUT ALL PHASES

MATERIAL LIST		
NO.	Qty.	DESCRIPTION
a	7	BOLTS, MACHINE, 5/8"xLENGTH REQUIRED
b	14	WASHERS 2-1/4" SQUARE
c	7	NUT, LOCK, SQUARE, 5/8"
d	2	SCREW, LAG, FETTER, 1/2"x4"
e	–	JUMPERS, 4/0 ACSR
h	6	CONNECTOR, COMPRESSION TAP, #2-4/0
i	1	SWITCH, HUBBELL-CHANCE, D7HE2CLATU, OR APPROVED EQ.

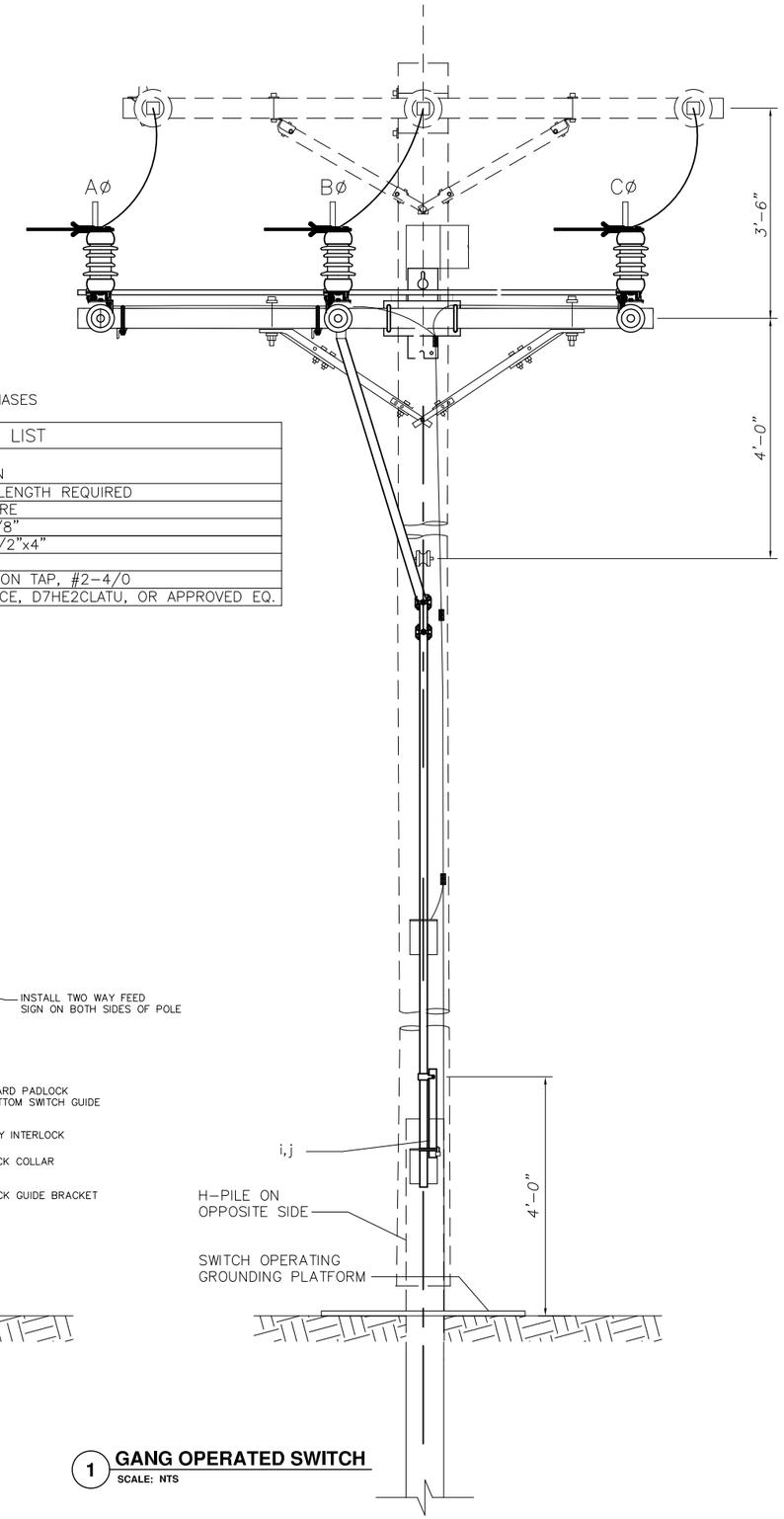

1 **GANG OPERATED SWITCH**
SCALE: NTS

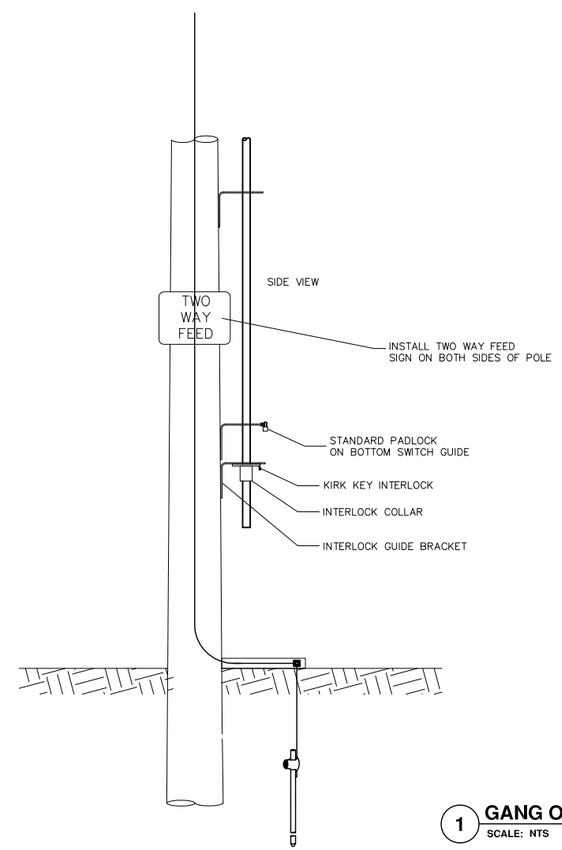

2 **C9-1**
SCALE: NTS

AVEC
ALASKA VILLAGE ELECTRIC COOPERATIVE
Anchorage, Alaska 99503
4831 Eagle Street

STATE OF ALASKA
49 FE
GREGORY ERRICO
EE 10279
REGISTERED PROFESSIONAL ENGINEER

CRW ENGINEERING GROUP LLC
3940 ARCTIC BLVD. SUITE 300
ANCHORAGE, ALASKA 99503
PHONE: (907) 562-3252
FAX: (907) 561-2273

SAINT MARYS, ALASKA
WIND TURBINE PROJECT
ELECTRICAL DISTRIBUTION IMPROVEMENTS

DETAILS

NO.	REVISION	BY	DATE

Plot Date 10/21/11
Designed GME
Drawn MME
Approved

Sheet No. E10
SHEET – OF –

File: \\A-PC\Users\Public\G.ERRICO SHARED\crw\SMarys\St._Mary's_Preliminary_drafting\St Marys Base – 2007\30704_02 Base-EEE-2.dwg

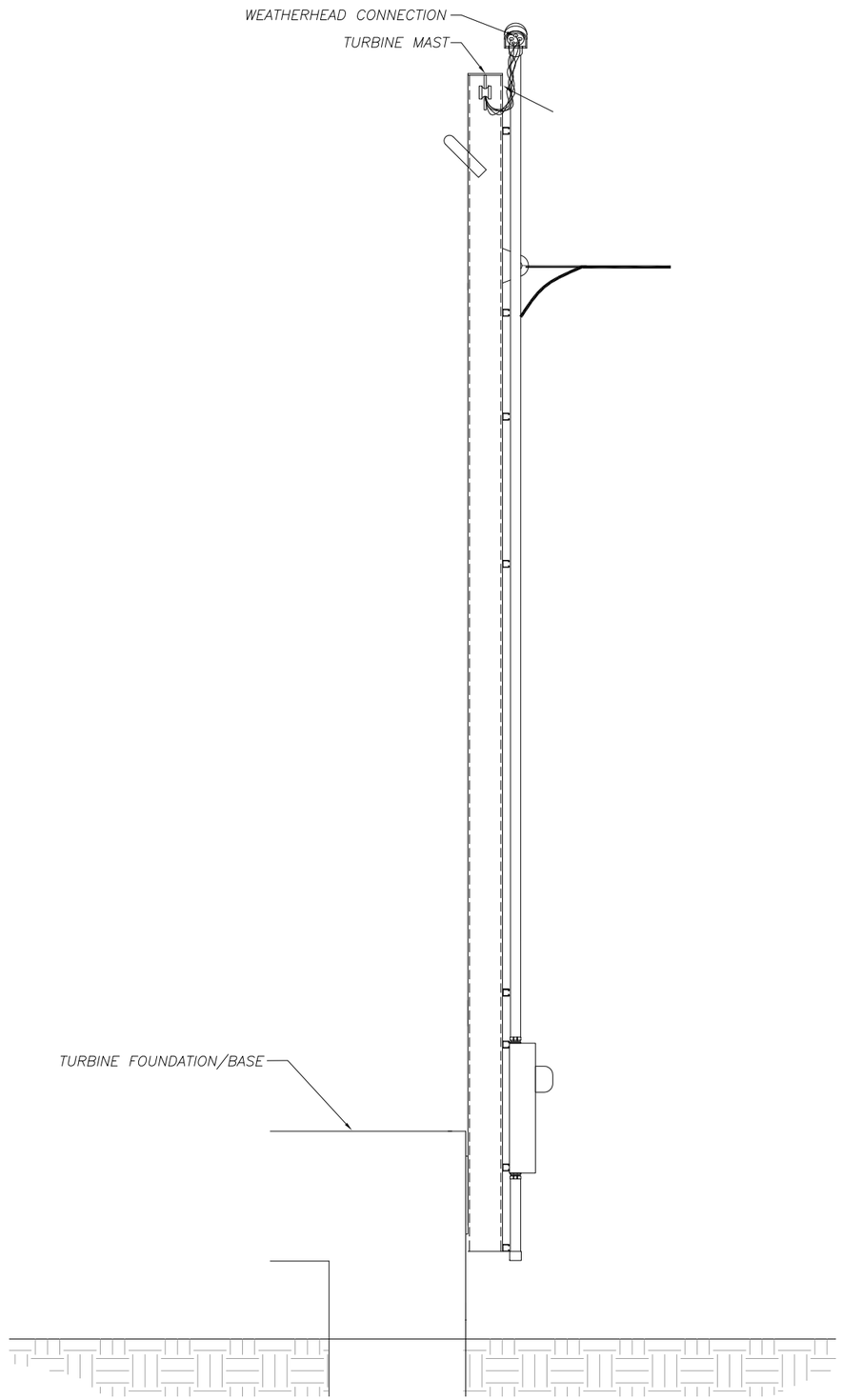

2 TURBINE MAST-SIDE VIEW
SCALE: NTS

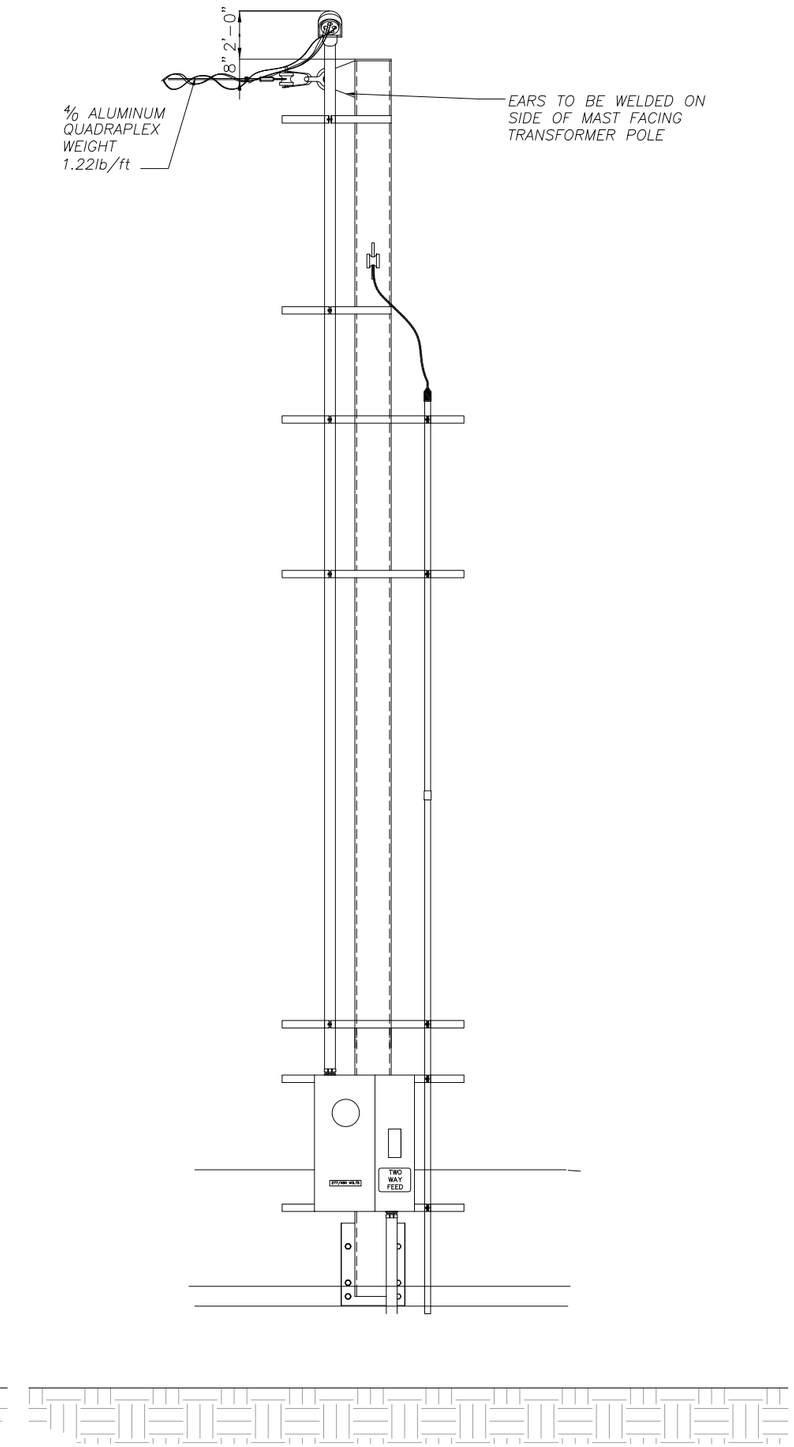

1 TURBINE MAST-FRONT VIEW
SCALE: NTS

AVEC
ALASKA VILLAGE ELECTRIC COOPERATIVE
Anchorage, Alaska 99503
4831 Eagle Street

STATE OF ALASKA
49TH
GREGORY ERRICO
EE 10279
REGISTERED PROFESSIONAL ENGINEER

CRW ENGINEERING GROUP LLC
3940 ARCTIC BLVD. SUITE 300
ANCHORAGE, ALASKA 99503
PHONE: (907) 562-3252
FAX: (907) 561-2273

SAINT MARYS, ALASKA
WIND TURBINE PROJECT
ELECTRICAL DISTRIBUTION IMPROVEMENTS
DETAILS

NO.	REVISION	BY	DATE

Plot Date 10/21/11
Designed GME
Drawn MME
Approved

Sheet No. E11
SHEET – OF –

File: \\A-PC\Users\Public\G.ERRICO SHARED\crw\StMarys\St._Mary's_Preliminary_drafting\St Marys Base – 2007\30704_02 Base-EEE-2.dwg